INTRODUCTION

To the owner or user: The service manual you are reading is intended to provide you, and the maintenance or service technician, with the information needed to install, start up, clean, maintain, and service this ice system.

The NM650R is a remote condenser modular ice system that fits a variety of Scotsman storage bins. It features: front service for the freezer, gearmotor, control box, water reservoir, and bin control; an electronic circuit for monitoring ice and water level; a thermostatic expansion valve; and R-502 as the refrigerant.

TABLE OF CONTENTS

For the Installer

- Specifications 2
- Location 5
- Remote Condenser 6

For the Plumber 9

For the Electrician 10

Final Check List 14

Start Up 15

Component Description 16

Operation 18

Maintenance & Cleaning 23

Service Diagnosis 26

Removal and Replacement

- Water Reservoir & Bin Controls 30
- Thrust Bearing & Breaker 31
- Auger 32
- Water Seal 33
- Evaporator 34
- Gearmotor 35

Circuit Board Testing 37

Parts Lists and Wiring Diagrams are located in the center of this manual, printed on yellow paper.

NM650R
FOR THE INSTALLER

The NM650R is designed to fit the following Scotsman storage bins:

- B590 and extentions, with bin top KBT18.
- BH800 using bin top KBT15 (one unit).
- BH800 if using two units, no bin top needed.
- BH1000 using bin top KBT16.

When installing a new system, check to be sure that you have everything you need before beginning:

- Correct Bin
- Correct Ice Machine
- Correct Bin Top
- All kits, legs, and information required for the specific job.

Top View

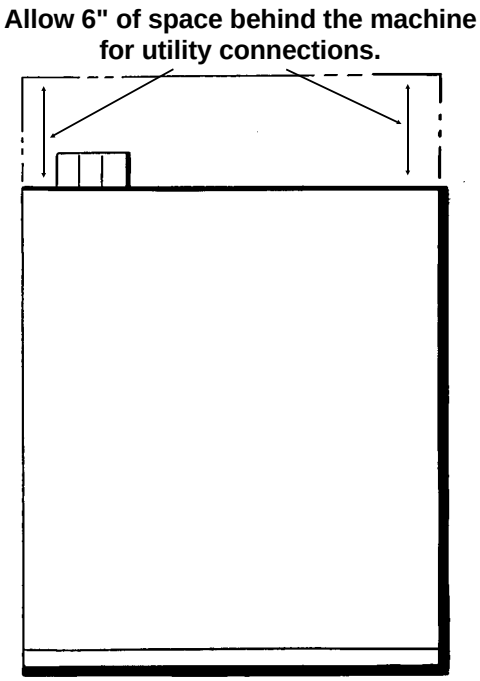

Back View

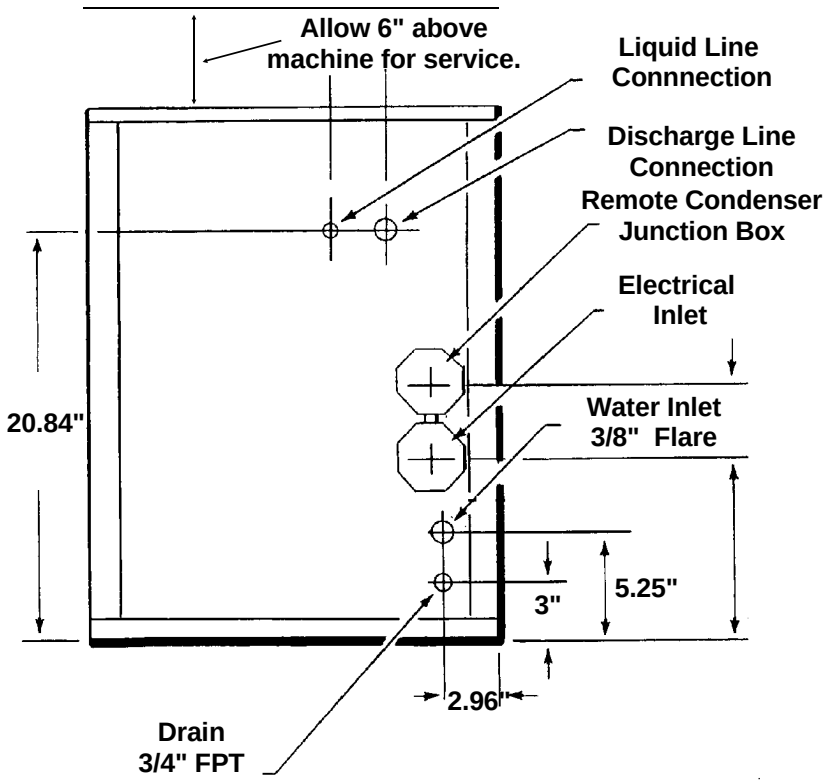

SPECIFICATIONS: ICEMAKER

Model Number	Diminsions (w/o bin) H X W X D	Basic Electrical	Ice Type	Cond. Type	Min. Circuit Ampacity	Max Fuse Size	Comp. H.P.
NM650RE-32A	27" x 21" x 24"	208-230/60/1	NUGGET	R/Air	14.9	25	3/4
NM650RE-1A	same	115/60/1	same	R/Air	22.5	35	3/4

* Minimum Circuit Ampacity is used to determine wire size and type per National Electric Code.

The Standard Finish is Enamel - Sandalwood. There is an optional stainless steel panel kit, SPKFM21 available to convert the unit to Stainless Steel. It is field installed.

FOR THE INSTALLER

Installation Limitations:

This ice system is designed to be installed indoors, in a controlled environment:

	Min	Max
Air Temperature	50^0F	100^0F
(Not including the remote condenser)		
Water Temperature	40^0F	100^0F
Water Pressure	20 PSIG	80 PSIG
Voltage	-5%	+10%
(Compared to the nameplate)		

Operating the machine outside of the limitations is misuse and can void the warranty.

Scotsman Ice Systems are designed and manufactured with the highest regard for safety and performance. They meet or exceed the standards of UL, NSF, and CSA.

Scotsman assumes no liability or responsibility of any kind for products manufactured by Scotsman that have been altered in any way, including the use of any part and/or other components not specifically approved by Scotsman.

Scotsman reserves the right to make design changes and/or improvements at any time. Specifications and design are subject to change without notice.

B590

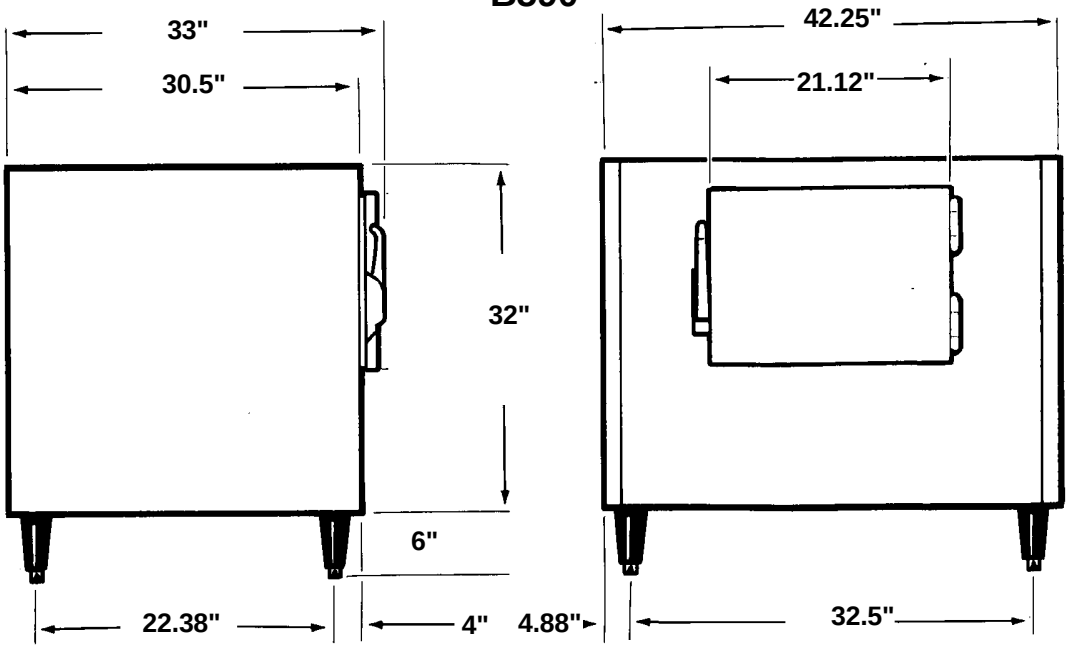

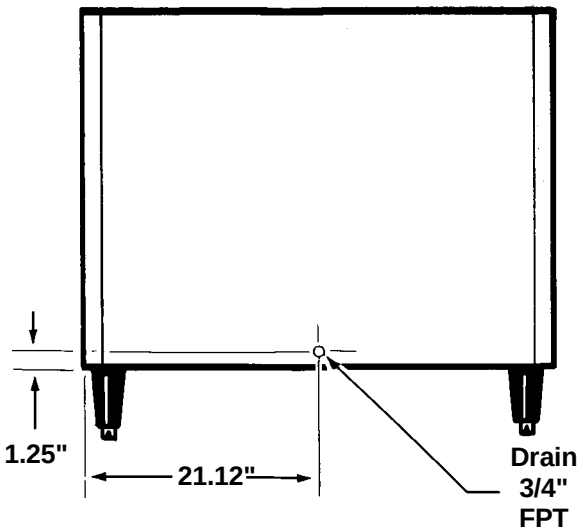

NM650R

REMOTE CONDENSER SPECIFICATIONS

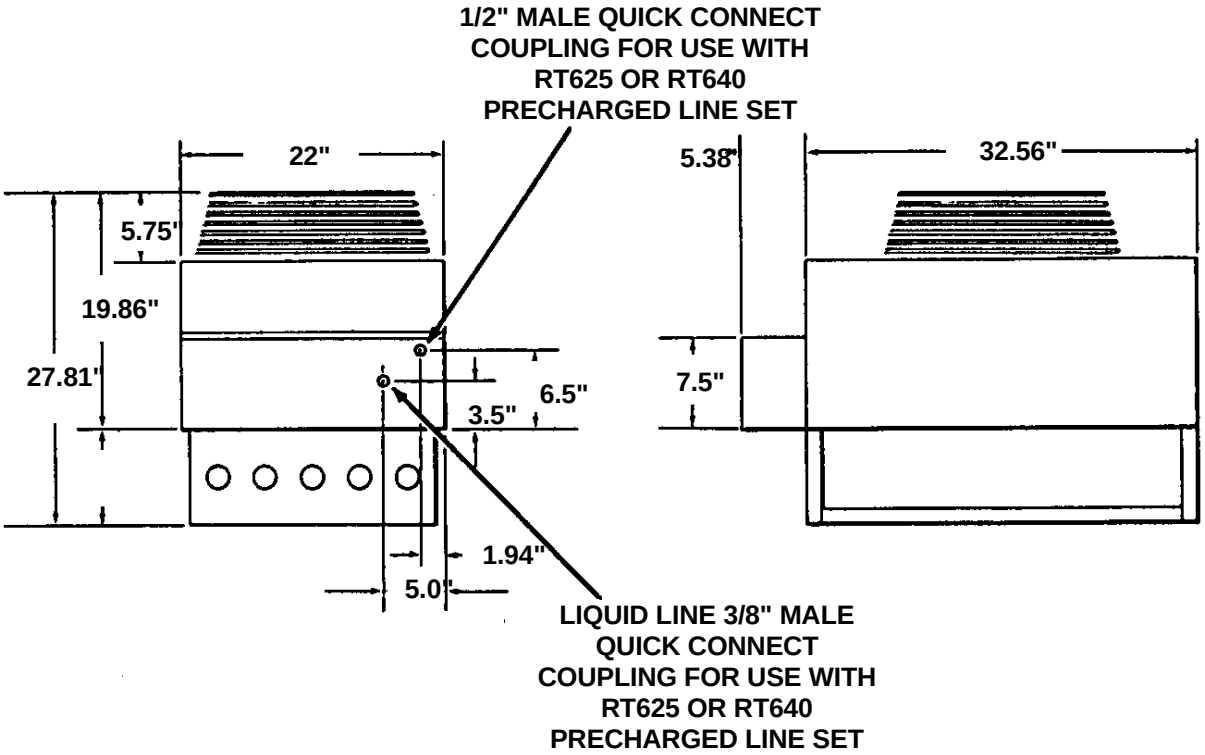

MODEL	DIMENSIONS H" X W" X D"	USE WITH	MINIMUM CIRC. AMPACITY+	BASIC ELECTRICAL
RC1051-32	27.8" X 22 X 37.94"	1 NM650R-32	2	208-230/60/1
RC1052-32	SAME	1 or 2 NM650R'S (-32)	2	SAME
RC551-1	SAME	1 NM650R-1	4.1	115/60/1

+Included with the icemakers minimum circuit ampacity. Use this value to determine wire size between icemaker and fan motor.

RT-625 Precharged line set, 25', R-502

RT-640. Precharged line set, 40', R-502

KCMR230. Fan Relay Kit used when two 230 volt (-32) icemakers are on one 230 volt (-32) two circuit condenser.

NAME PLATE

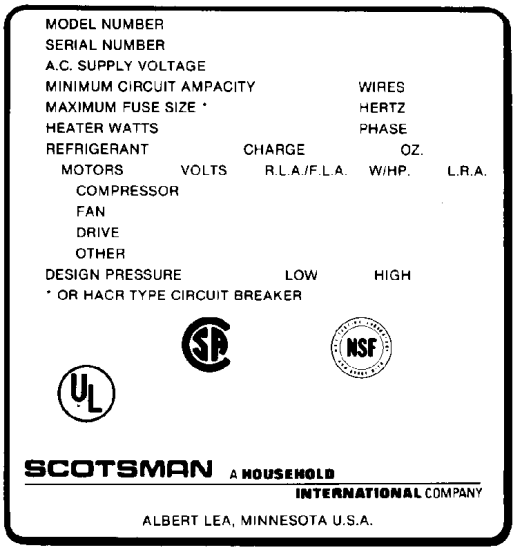

ICEMAKER NAMEPLATE LOCATED ON BACK PANEL

SERIAL PLATE LOCATED BEHIND FRONT PANEL

Typical Storage Bin with Extension and Bin Top

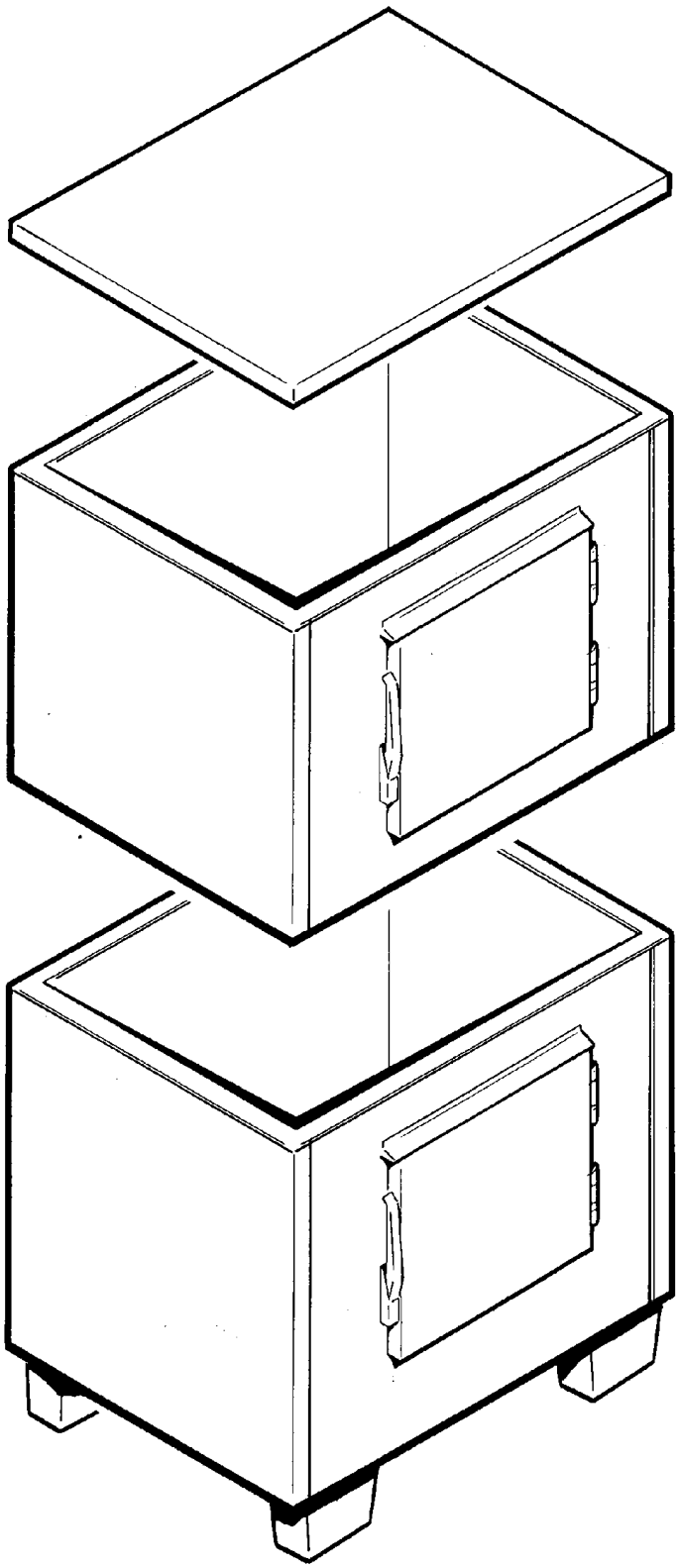

Location

After uncrating and inspection, the unit is ready for installation. It is important that the machine be installed in a location where it has enough space around it to be accessible for service, usually a minimum of 6 inches. Try to avoid hot, dirty and crowded locations. Be sure that the location for the machine is within the limitations described on page 3.

Storage Bin

Tip the storage bin on its back, using parts of the carton to protect the exterior finish. Install the legs into the threaded holes in the bottom of the bin. Turn the leg levelers all the way in preparation for leveling later. Return the bin to the upright position, remove paper covering the bin gasket.

Install the bin top according to the directions with the bin top.

Note: Do not push bin into position, but lift it there. Pushing a bin, especially one with ice in it, can cause damage to the legs and the leg mounts.

Ice Maker

The machine is heavy, so the use of a mechanical lift is recommended for lifting the machine high enough to install on top of the bin. After the unit is placed on the bin, line it up so it is even with the back side. Secure the machine to the bin with the hardware provided with the machine.

Remove the front panel and remove any shipping blocks.

Note: Be sure to allow a 6" minimum space above the top of the machine for service.

FOR THE INSTALLER: Remote Condenser

Location

Limited to a 40 foot or a 25 foot length of precharged refrigerant tubing connecting the icemaker to the remote condenser. The condenser must be above or level with the icemaker.

Select the best available location, protecting the condenser from extremes of dirt, dust, and sun.

Meet all applicable building codes. Usually the services of a licensed electrician are required.

Roof Attachment

1. Install and attach the remote condenser to the roof of the building, using the methods and practices of construction that conform to the local building codes, including having a roofing contractor secure the condenser to the roof.

2. Have an electrician connect the remote condenser fan motor to the icemaker, using the junction box at the back of the icemaker.

PRECHARGED LINE ROUTING

////////////////////////////CAUTION////////////////////////////

Do not connect precharged tubing until all routing and forming of the tubing is complete. See the coupling instructions, page for connecting instructions.

//

1. Each set of precharged refrigerant lines (either 25 foot or 40 foot) consists of a 3/8 inch diameter liquid line and a 1/2 inch diameter discharge line. Both ends of each line have quick connect couplings, one end has a schrader valve connection, that end goes to the condenser.

Note: The openings in the building ceiling or wall, listed in the next step, are the minimum sizes recommended for passing the refrigerant lines through.

2. Have the roofing contractor cut a minimum hole for the refrigerant lines of 1 3/4 inch. Check local codes, a separate hole may be required for the electrical power to the condenser.

////////////////////////////CAUTION////////////////////////////

DO NOT KINK OR CRIMP REFRIGERANT TUBING WHEN INSTALLING IT.

//

3. Route the refrigerant lines through the roof opening.

Follow straight line routing whenever possible.

Any excess tubing MUST be retained within the building.

4. Spiral the excess length of pre charged tubing inside the building. Use a horizontal spiral (as illustrated) to avoid any traps in the lines.

5. Have the roofing contractor seal the holes in the roof per local codes.

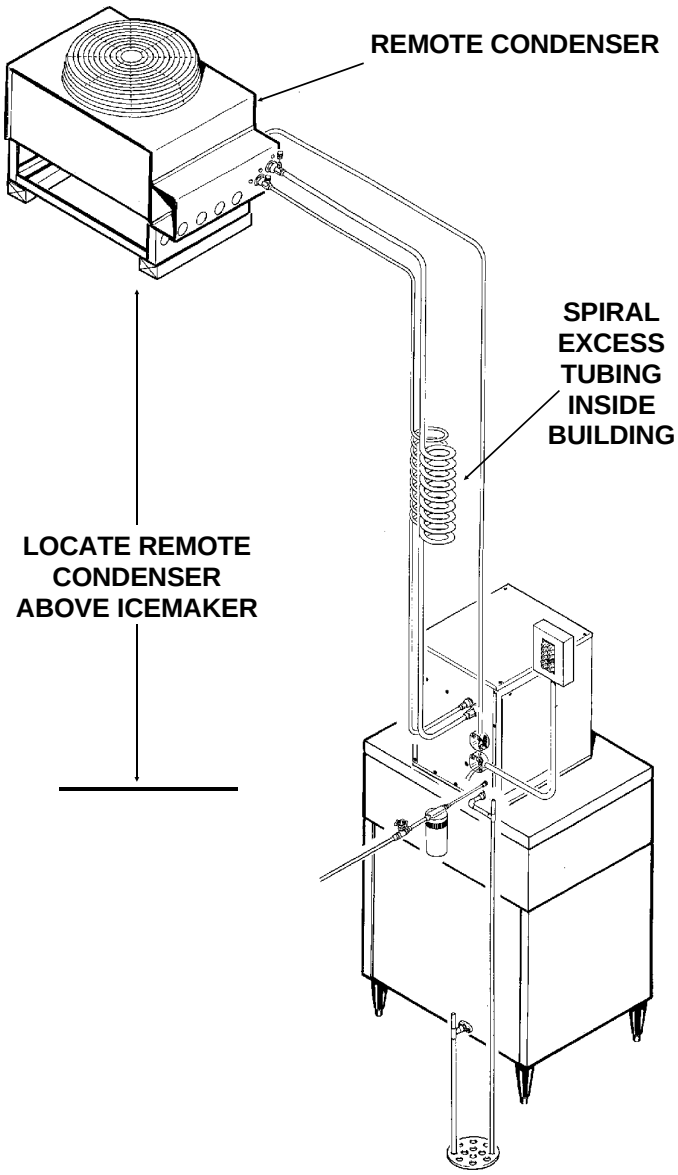

FOR THE INSTALLER: Precharged Lines

COUPLING INSTRUCTIONS

////////////////////////////CAUTION////////////////////////////

The couplings on the sets of precharged lines are self sealing when installed properly. Carefully follow the instructions:

//

1. Remove the protector caps and plugs. Wipe the seats and threaded surfaces with a clean cloth to be certain that no foreign matter remains on them.

2. Lubricate the inside of the couplings, especially the O-Rings with refrigerant oil.

3. Begin tightening the couplings together by hand, then using two wrenches (it is important that ONLY the nut on the precharged lines be turned, the other parts of the couplings must NOT be allowed to turn or the process will tear out the diaphragms and they will be loose in the refrigeration system) tighten the coupling until it bottoms out or a definite increase in resistance is felt.

4. Using a marker or pen, mark a line lengthwise from the coupling union nut to the bulkhead. Then tighten the coupling and additional 1/4 turn. As the nut turns, the line will show when 1/4 turn is made.

5. Connect the 3/8 inch liquid line (schrader valve end) to the remote condenser fitting marked "liquid line".

6. Connect the other end of the liquid line to the icemaker fitting marked "liquid line."

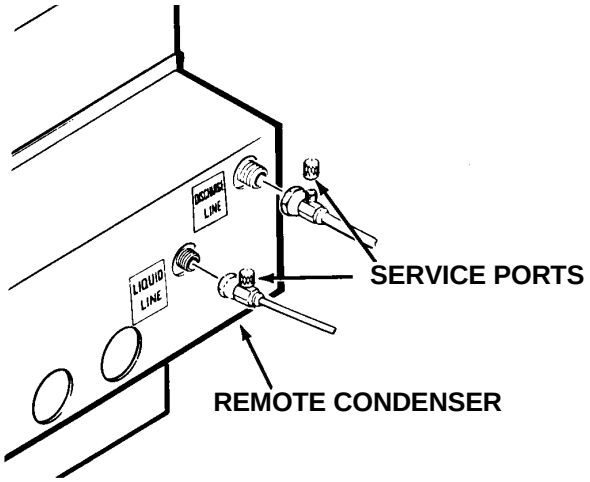

7. Connect the 1/2 inch discharge line (schrader valve end) to the remote condenser fitting marked "discharge line".

8. Connect the other end of the liquid line to the icemaker fitting marked "discharge line".

9. After all connections are made, and after the king valve has been opened, check the couplings for leaks.

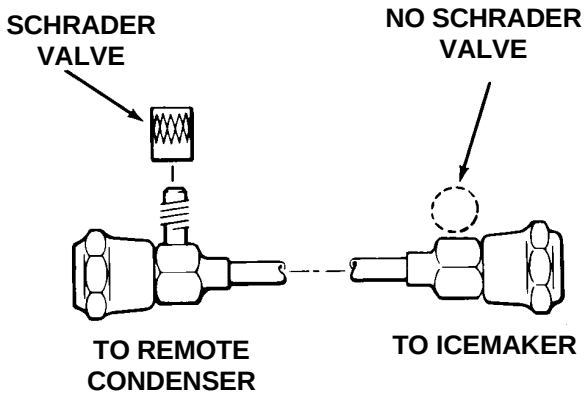

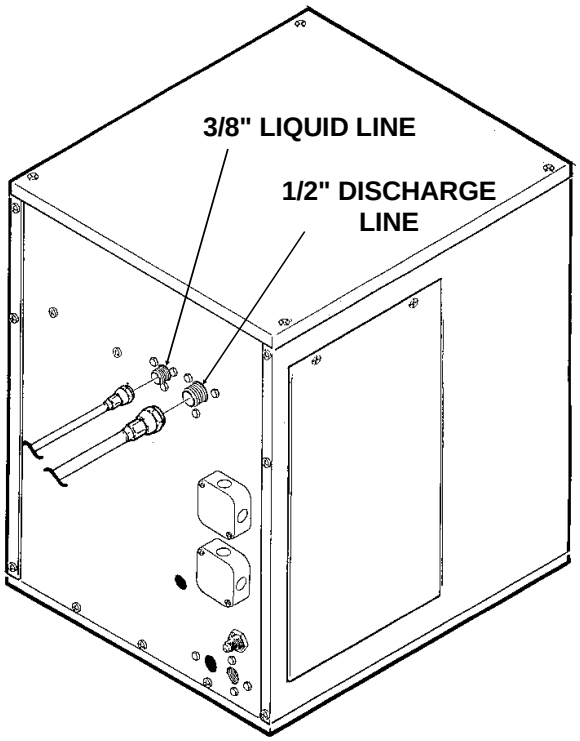

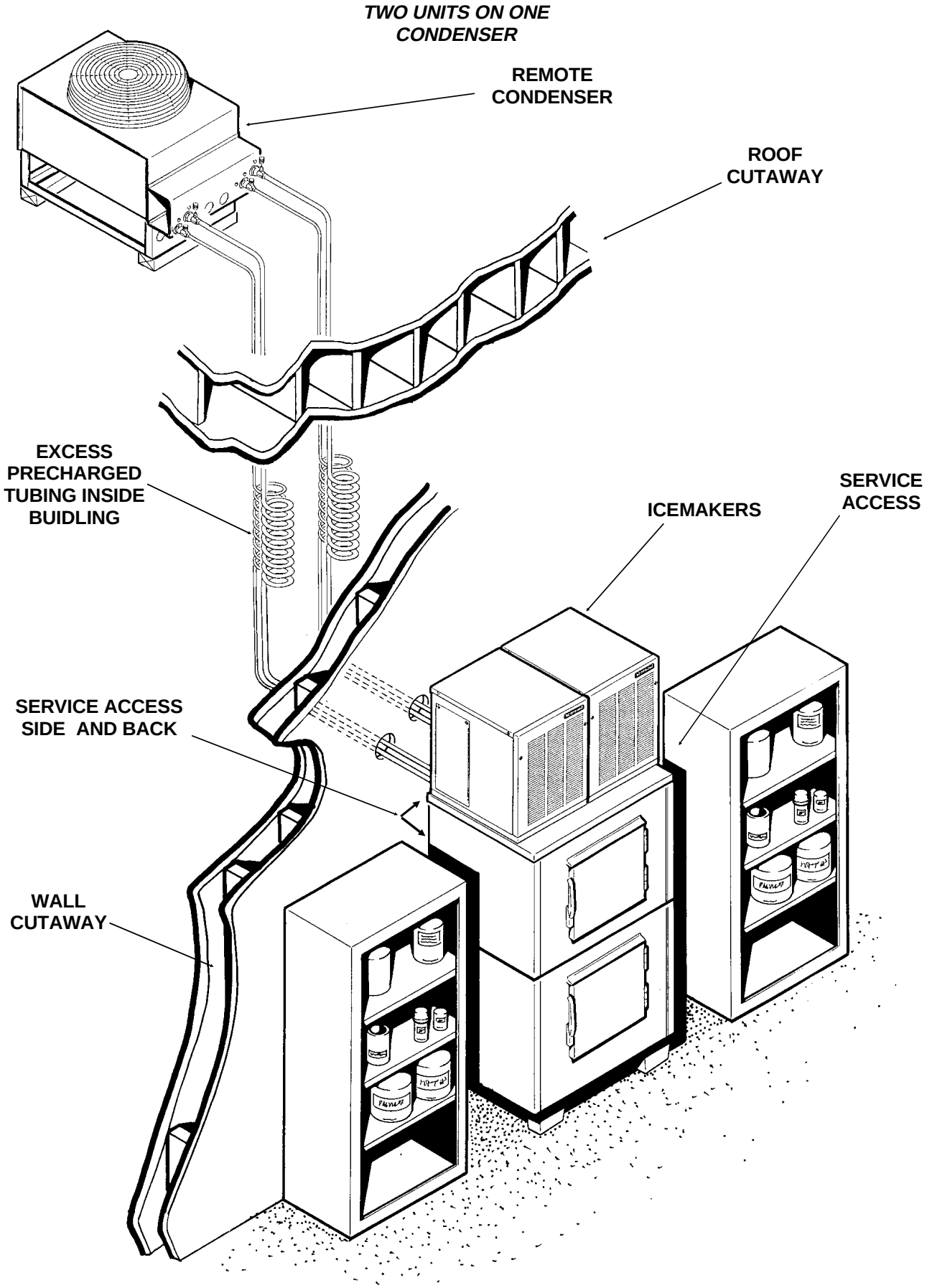
TWO UNITS ON ONE CONDENSER
REMOTE CONDENSER
ROOF CUTAWAY
EXCESS PRECHARGED TUBING INSIDE BUIDLING
ICEMAKERS
SERVICE ACCESS
SERVICE ACCESS SIDE AND BACK
WALL CUTAWAY

FOR THE PLUMBER

CONFORM TO ALL APPLICABLE CODES

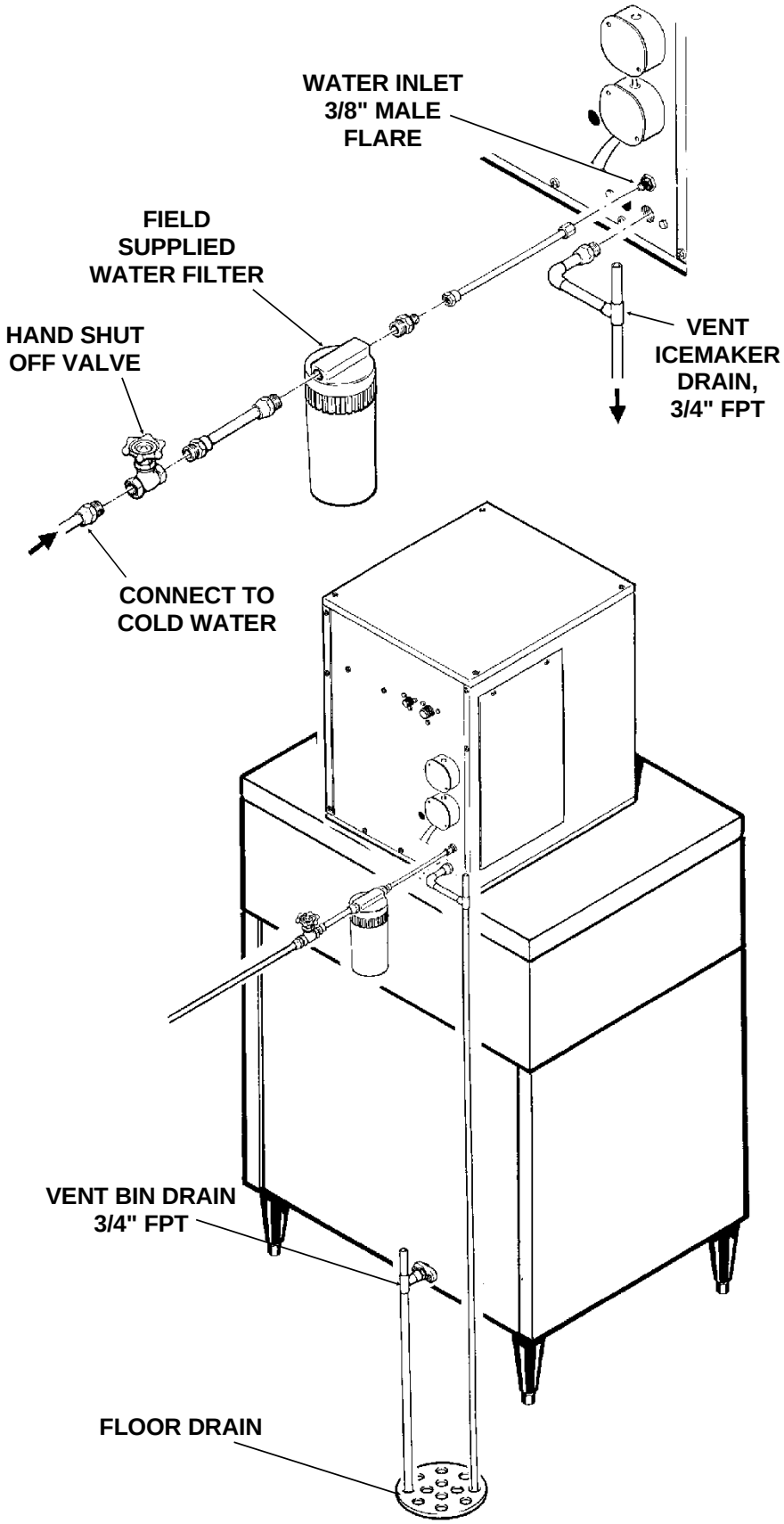

Water Inlet

The recommended water supply is cold water. Use 3/8" O.D. copper tubing, connect to the 3/8" male flare at the back of the cabinet. Install a hand valve near the machine to control the water supply.

Drains

There is one 3/4" FPT drain at the back of the cabinet, the drain line is of the gravity type, and 1/4 inch per foot fall is an acceptable pitch for the drain tubing. There should be a vent at the highest point of the drain line, and the ideal drain receptacle would be a trapped and vented floor drain. Use only 3/4" rigid tubing.

Storage Bin: A separate gravity type drain needs to be run. Insulation of this drain line is recommended.

CONFORM TO ALL APPLICABLE CODES

The electrical power to the unit is supplied through the junction box at the rear of the machine.

Check the nameplate (located on the back panel) for the voltage requirements, and for the minimum circuit ampacity. The machine requires a solid chassis to earth ground wire.

The ice maker should be connected to its own electrical circuit so it would be individually fused. Voltage variation must remain within design limitations, even under starting conditions.

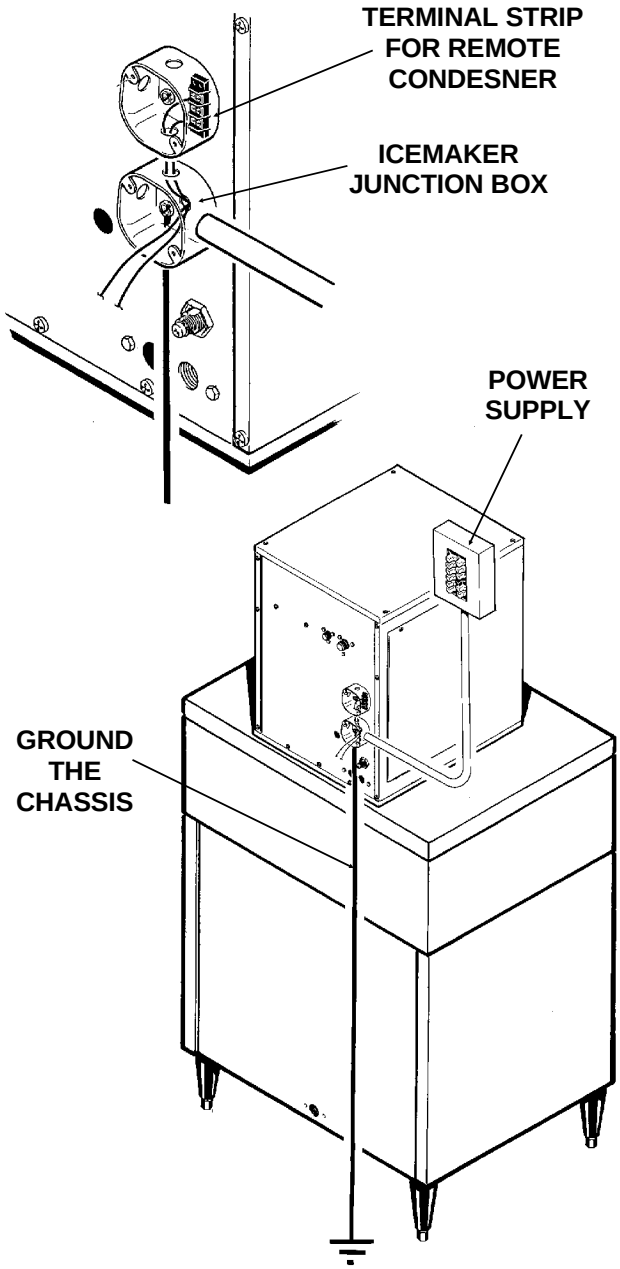

Electrically the remote condenser fan motor is connected to the icemaker at the contactor terminals for the compressor and the fan motor operates whenever the compressor operates.

Electrical connections are made at the junction box at the back of the icemaker and at the junction box on the remote condenser.

The remote condenser must be wired to the icemaker in accordance with local and national electrical codes with a minimum of 18 Awg. wire with an ground bonding wire connected to the ground screws provided in both the condenser and machine field wiring boxes. All outdoor wiring must be in rainproof conduit.

All external wiring must conform to national, state, and local electrical codes. The use of a licensed electrician is required to perform the electrical installation.

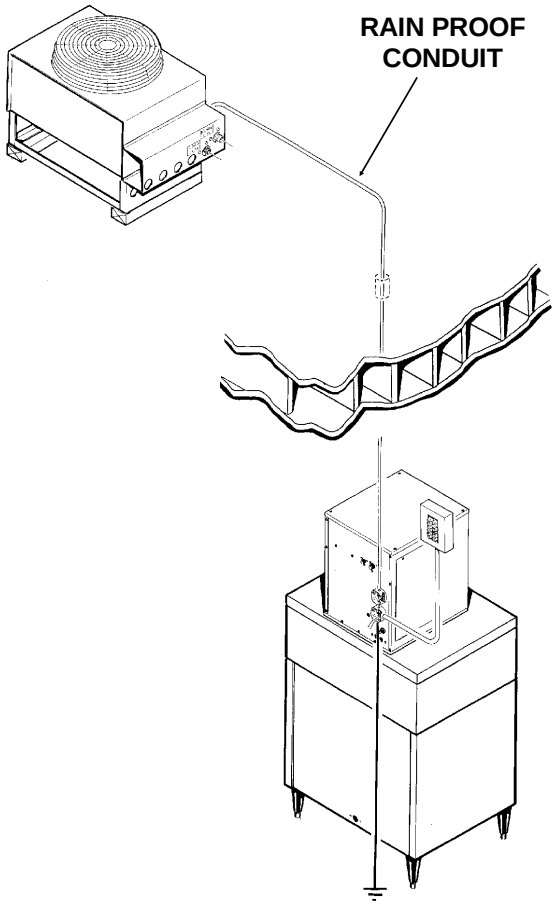

FOR THE ELECTRICIAN: Fan Relay Kit - 230 volt (-32) only

////////////////////////WARNING////////////////////////////

Do all wiring with the electrical power disconnected.

//

To install the KCMR230 fan relay kit when using (2) FM800R icemakers and one 230 volt, two circuit remote condenser.

Do not use with FM800RE-1A (115v)

See the remote condenser nameplate for current requirements to determine wire size to be used for electrical hookup. Refer to wiring diagram.

All external wiring should conform to the national, state and local electrical codes. Usually an electrical permit and services of a licensed electrician will be required.

1. Mount the control box in a convenient location.
2. Attach a solid earth ground wire to the ground screw.
3. Route connecting wires from the first ice maker junction box (marked condenser fan) and connect it to the KCMR230 terminal strip marked: NO. 1 ICE MACHINE.
4. Route connecting wires from the second machine junction box (marked condenser fan) and connect it to the KCMR230 terminal strip marked: NO. 2 ICE MACHINE.
5. Route connecting wires from KCMR230 terminal strip marked: TO REMOTE FAN and connect at the remote condenser junction box.

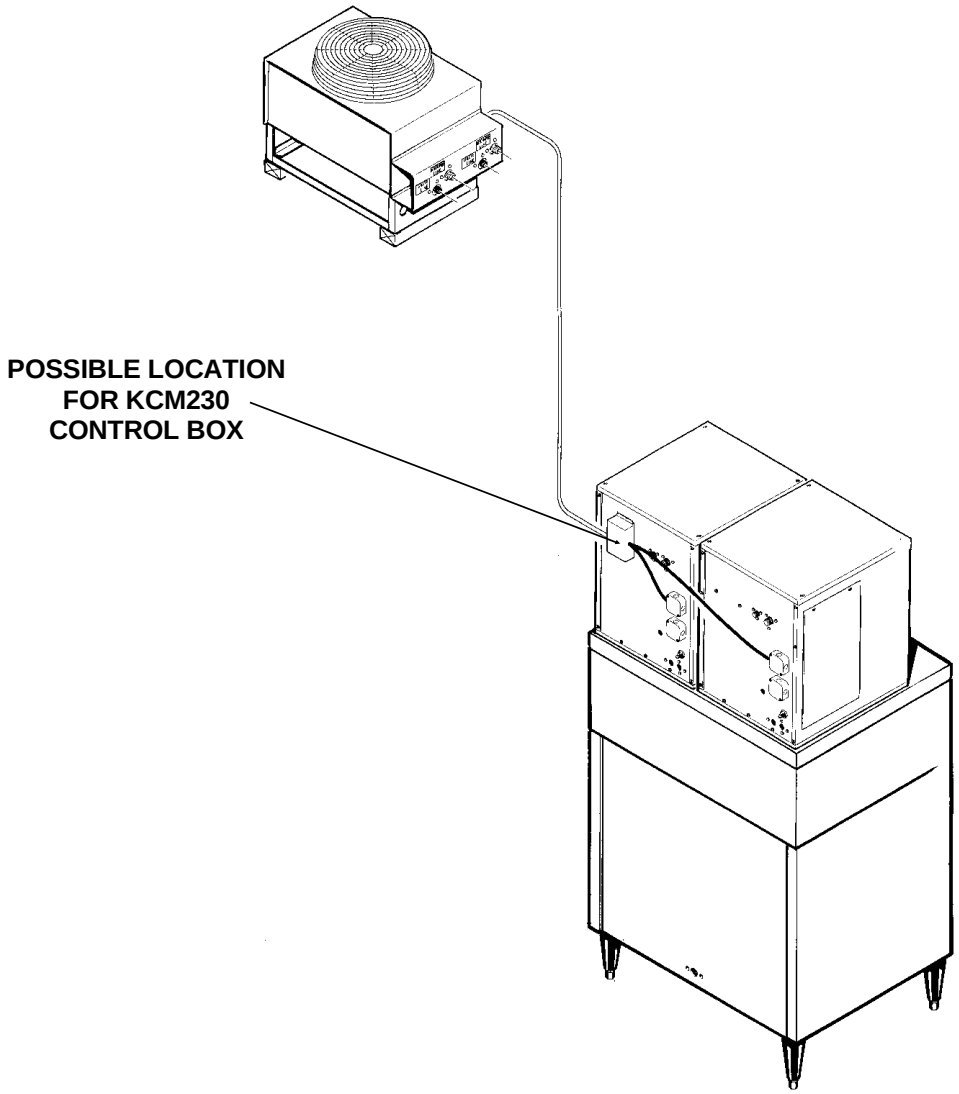

FOR THE ELECTRICIAN: Fan Relay Kit Phasing (Do After Start Up)

Only for 230 volt icemakers and 230 volt condenser.

6. Check phasing of the electrical circuit as follows:

A. The phasing of the wiring MUST now be checked, as incorrect phasing will result in a failure of the kit relay.

Below is an illustration of the KCMR230 terminal strip. Note that each terminal is marked: 1-2-3-4-5-6. For proper phasing:

Terminals #1 and #3 must be connected to the same side of the line (such as L1)

Terminals #2 and #4 must be connected to the same side of the line (such as L2).

B. Make a test with a volt meter as follows:

1. Switch on icemaker #1 first, then switch on icemaker #2.

(The compressors must be operating for this test. Do this after start up.)

2. Test with a volt meter between terminals #2 and #4, then between terminals #1 and #3. Compare the readings obtained to the ones in the following list:

C. Test terminals 1-2 = Full Voltage (208-230)
Test terminals 1-3 = No voltage
Test terminals 2-3 = Full Voltage
Test terminals 2-4 = No voltage
Test terminals 3-4 = Full voltage
Test terminals 1-4 = Full voltage

D. If there is full voltage where there should be no voltage, turn off icemaker #2, (both switches) Then turn off icemaker #1 (both switches). The connections at the KCMR230 terminal strip marked icemaker #1 must be reversed (put the wire that was on 1 on 2 and the wire that was on 2 on 1).

////////////////////////WARNING////////////////////////////

Do all wiring with the electrical power disconnected.

//

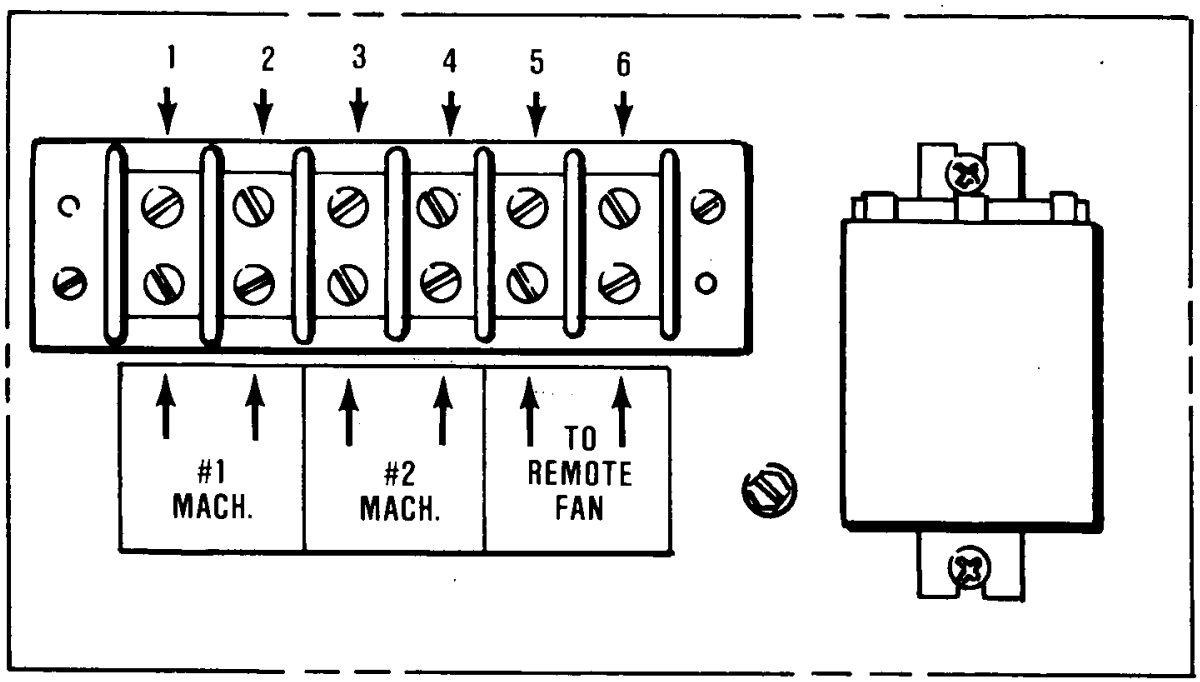

FOR THE INSTALLER: Completed Installation

A typical installation should generally appear as illustrated below. The remote condenser must be located above the icemaker and the precharged lines installed per the instructions on page 6.

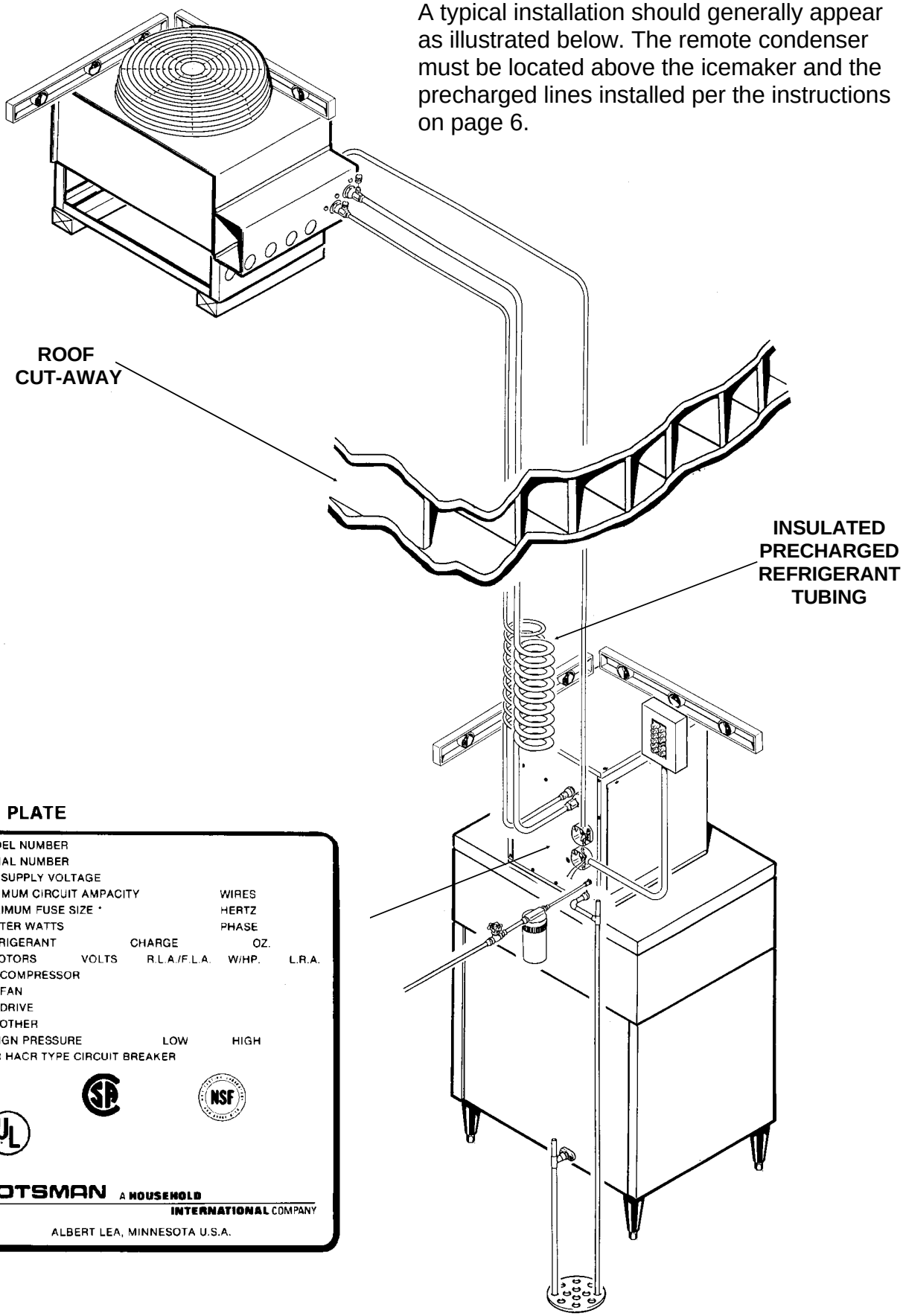

NAME PLATE

MODEL NUMBER
SERIAL NUMBER
A.C. SUPPLY VOLTAGE
MINIMUM CIRCUIT AMPACITY WIRES
MAXIMUM FUSE SIZE * HERTZ
HEATER WATTS PHASE
REFRIGERANT CHARGE OZ.
MOTORS VOLTS R.L.A./F.L.A. W/HP. L.R.A.
COMPRESSOR
FAN
DRIVE
OTHER
DESIGN PRESSURE LOW HIGH
* OR HACR TYPE CIRCUIT BREAKER

SCOTSMAN A HOUSEHOLD INTERNATIONAL COMPANY
ALBERT LEA, MINNESOTA U.S.A.

NM650R

FOR THE INSTALLER: Final Check List

1. Is the ice system installed indoors in a location where the air and water temperatures are controlled, and where they do not exceed the design limitations?
2. Is there an electrical service disconnect within sight of the installed machine? Has the voltage been checked, and compared to nameplate requirements?
3. Have all the plumbing connections been made and checked for leaks?
4. Has the machine and bin been leveled?
5. Is there a minimum of 6" clearance at the rear, left, and right of the machine for proper service access and air circulation?
6. Is the water pressure a minimum of 20 psig?
7. Has the machine been secured to the bin?
8. If two units on one condenser, has the relay kit been installed?
9. Is there a water shut off valve installed near the machine?
10. Is the remote condenser installed per local building codes, and in a place where it has adequate ventilation and minimal solar heat gain?
11. Has all shipping material and literature (inside the front panel) been removed from the units?
12. Have the remote condenser and precharged lines been properly installed?
13. Has the electrical connection between the icemaker and the condenser been made?

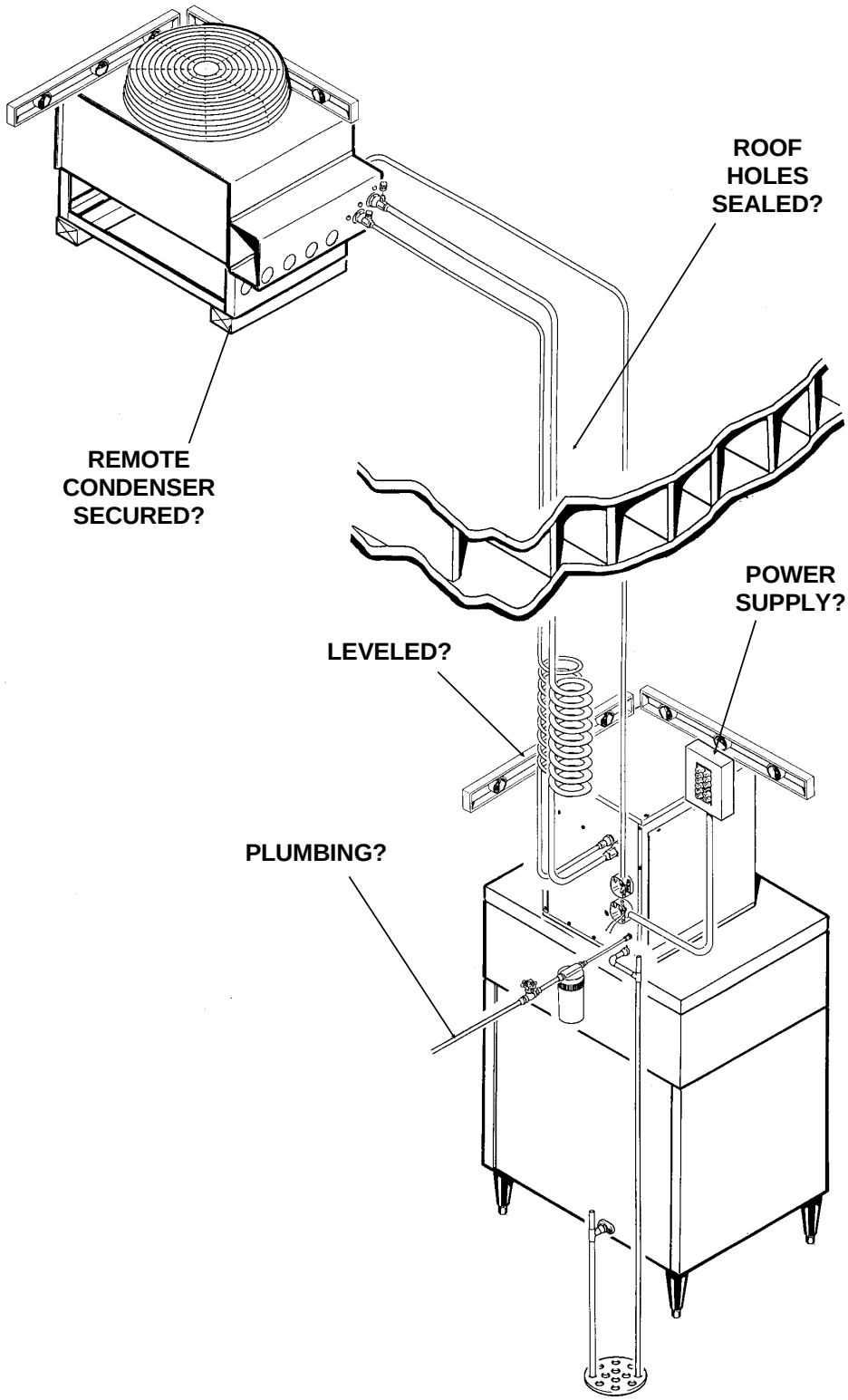

14. Verify that the master switch is in the OFF postion.
15. Switch on the electrical power.
16. Refer to Pre-Start instructions, the next page.

START UP

Pre-Start Inspection

1. Remove the front, left, and right side service panels.

2. Check that any styrofoam shipping blocks have been removed.

3. Inspect the interior of the machine for loose screws or wires. Check that no refrigerant lines are rubbing each other. Check that the fan blade turns freely (remote condenser).

4. Check that the refrigerant lines are properly installed.

5. Check that the electrical power has been on for at least 12 hours and that the compressor dome is warm.

6. Check that the unit is installed corerectly according to the final check list on page 14.

Start Up

1. Go through the pre-start inspection.

2. Open the hand valve, observe that water enters the water reservoir, fills the tube from the reservoir to the evaporator, and then shuts off. Check for leaks.

3. Open the King Valve.

4. Turn the master switch on.
The electrical start up sequence is now on automatic.
A. There should be a short (15 second) delay before the gearmotor starts.
B. After the gearmotor starts, the liquid line valve will open, the low pressure control will close and the compressor will start.

5. The remote condenser fan turns, and the condenser begins to discharge warm air.

6. The unit should soon be making ice, if desired the low side pressure can be checked, it should be 30 psig + or - 4 psig. The discharge pressure will depend upon air and water temperatures, but should be between 200 psig and 280 psig.

7. **THERE ARE NO ADJUSTMENTS TO MAKE**, so replace the panels.

8. Clean and/or sanitize the storage bin interior, wipe off the exterior with a clean, damp cloth.

9 Give the owner/user the service manual, instruct him/her in the operation of the unit, and make sure they know who to call for service.

10. Fill out the manufacturers registration card, and mail it to the Scotsman Factory.

11. Fill out the field quality audit form, and mail it to the Scotsman factory.

NM650R

COMPONENT DESCRIPTION

Control Box: Contains the electrical controls that operate the machine.

High Pressure Cut Out: A manual reset switch sensing the high side refrigeration pressure. It is set to shut the machine off at 450 psig.

Evaporator: A vertical stainless steel tube, refrigerated, and water filled. In it, there is a stainless steel auger.

Reservoir: Float operated, it maintains the water level in the evaporator at a constant level, it also contains the water level sensor.

Water Level Sensor: Senses if there is water in the reservoir to make ice out of. Will shut the machine off it there is none.

Ice Discharge Chute: Directs the ice produced by the evaporator into the storage bin.

Ice Level Sensor: An electronic "eye", it senses the presence of ice in the bottom of the ice discharge chute. Operates to turn the ice machine on and off automatically as the level of ice in the bin changes.

Gear Motor: An oil filled, speed reduction gearbox, driving the auger.

Cleaning Drain Tube: When uncapped and lowered, drains the evaporator.

Compressor: The refrigerant vapor pump.

Expansion valve: The refrigerant metering device.

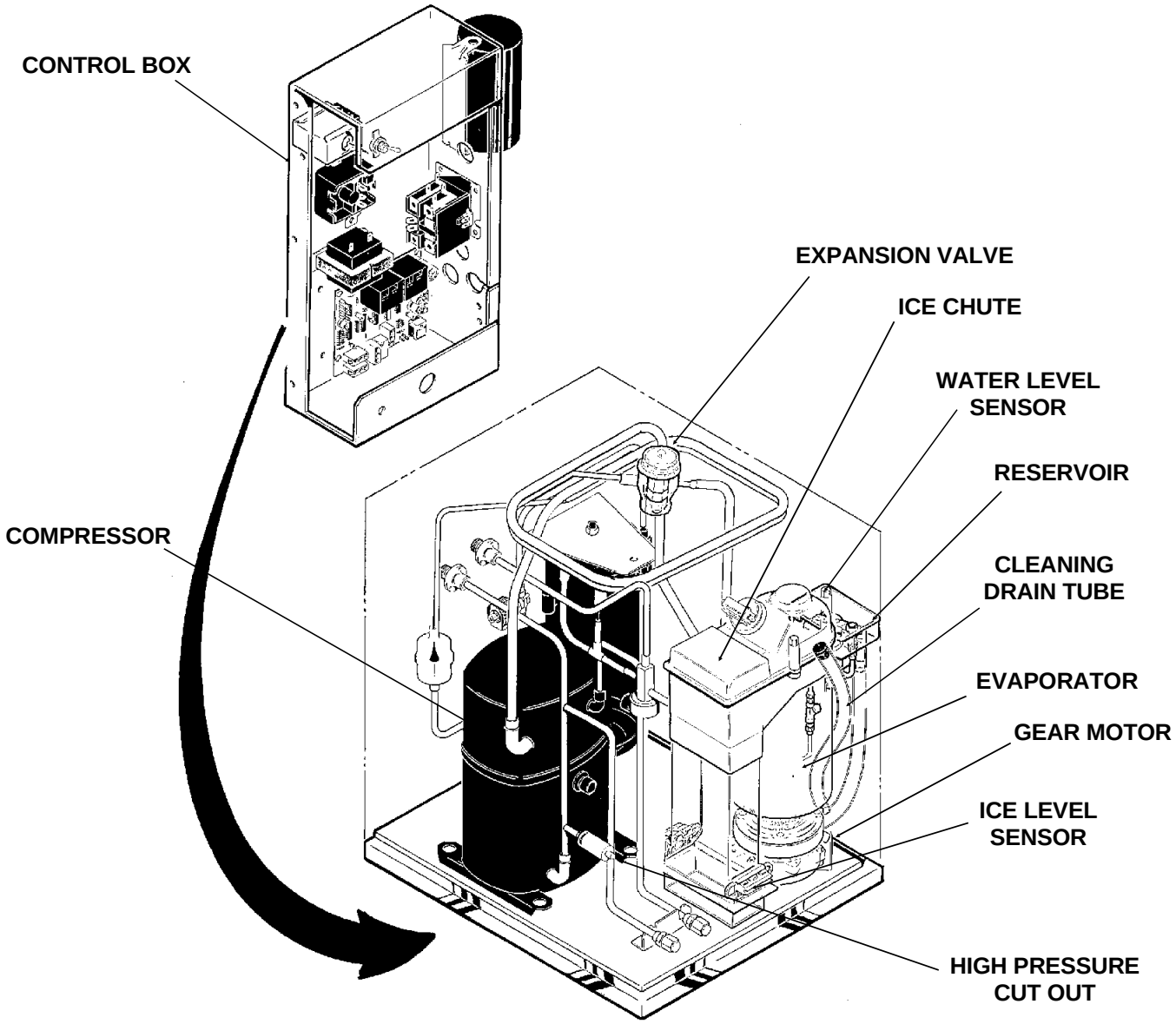

COMPONENT DESCRIPTION: Control Box

Contactor: A definite purpose contactor connecting the compressor and the remote condenser fan motor to the power supply.

Circuit Board: Controlling the ice machine through sensors and relays. The sensors are: ice level, and water level. The relays are for the gear motor (with a built in time delay to clear the evaporator of ice when the unit turns off) and for the liquid line valve. Also includes the reset switch.

Transformer: Supplies low voltage to the circuit board.

Pump Down Control: An automatic reset pressure switch connected to the low side of the refrigeration system. Controls the compressor.

Potential Relay: The compressor start relay.

On/Off Switch: Manual control for the machine.

Reset Switch: Manual reset. When the unit shuts off from the ice discharge chute being overfilled (opening the microswitch at the top of the chute) or if the high pressure cut out switch opens.

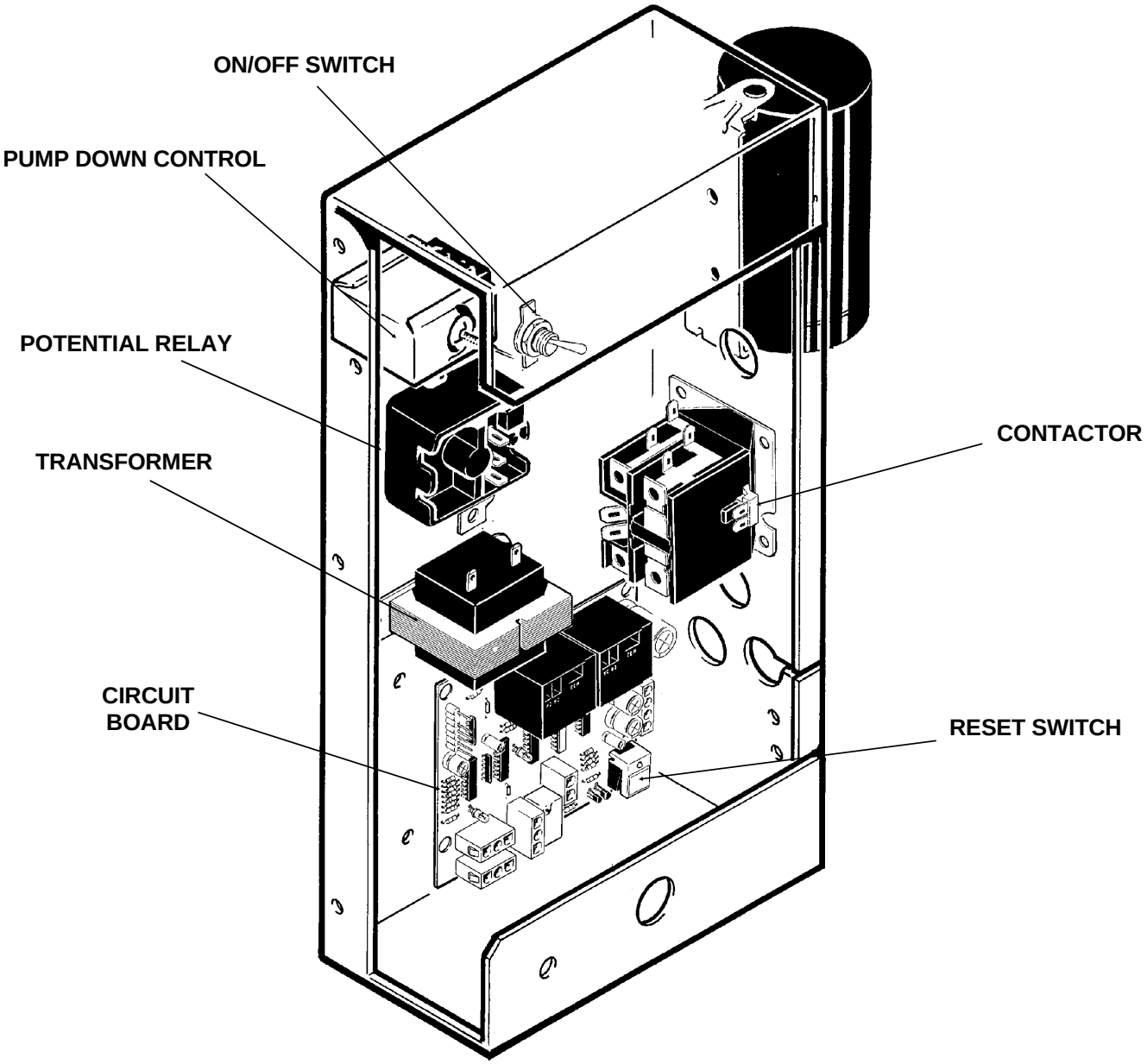

ELECTRICAL SEQUENCE

Refer the wiring diagram as needed.

If the machine is switched off at the master switch, but is otherwise ready to go, switching the master switch to ON does the following:

- The bin empty light on the circuit board goes on
- There is a 15 second delay
- If there is enough water in the reservoir, the circuit board will allow the machine to start up.

Start up consists of:

- The liquid line relay and auger motor relay become energized, connecting power to the liquid line solenoid coil and to the windings of the auger motor.
- The liquid line solenoid opens, raising the low side pressure.
- The pump down control closes.
- The auger motor starts, and the centrifugal switch closes, connecting power to the compressor contactor coil.
- The contactor is energized, connecting power to the compressor, and the compressor starts.
- As ice goes past the ice level sensors, the bin empty light will stay on, and the machine will continue to run, unless the ice stays between the sensors for more than 15 seconds (bin full). At that point, the bin empty light goes out, and the machine shuts down.

Shut Down consists of:

- The liquid line solenoid closes, lowering the suction pressure.
- The pump down control opens.
- The compressor contactor opens
- The compressor stops
- The auger motor is run by the circuit board for 2.5 more minutes, clearing out ice in the evaporator, and then
- The auger motor relay opens, and the auger motor stops.

If the ice level sensor is clear (bin empty) for more than 15 seconds, the machine will start up again.

Another purpose of the circuit board is to turn the machine off if there is not enough water in the machine.

- When the water level in the reservoir falls below the water level sensor, the machine will "shut down"
- When the water refills the reservoir, the machine will start up again.

Separate from the circuit board:

- The high pressure control will stop the machine immediately if it opens. It is manually reset at the control and at the reset switch on the circuit board.
- The spout switch will stop the machine immediately if it opens. It is a manual reset at the reset switch on the circuit board.
- The master switch is the manual control for the complete machine, but it is not a service disconnect.

OPERATION: Water

Water enters the machine through the 3/8" male flare at the rear of the cabinet, goes to the water reservoir which it enters through the float valve. The water them goes out the bottom of the reservoir tank to the bottom of the evaporator.

Reservoir overflow or evaporator condensation is routed to the drain.

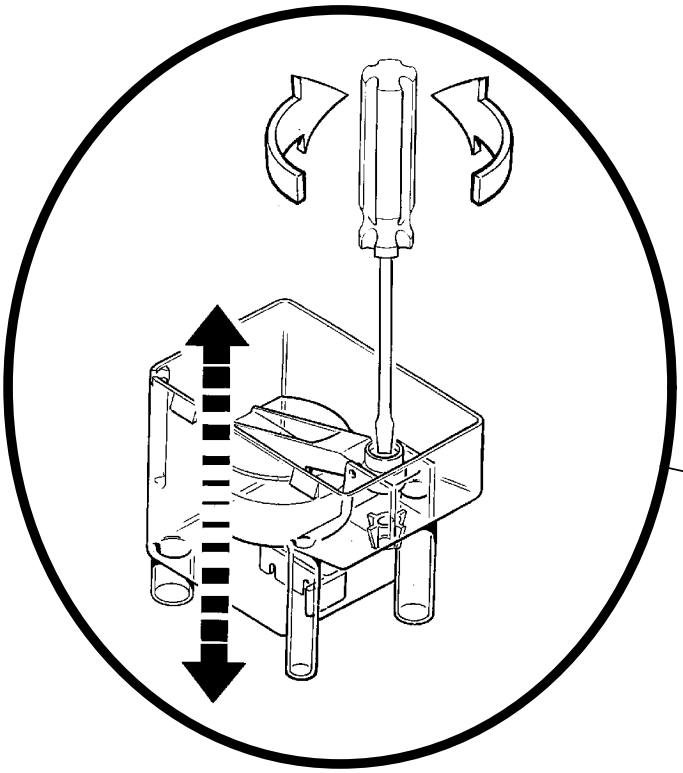

WATER RESERVOIR

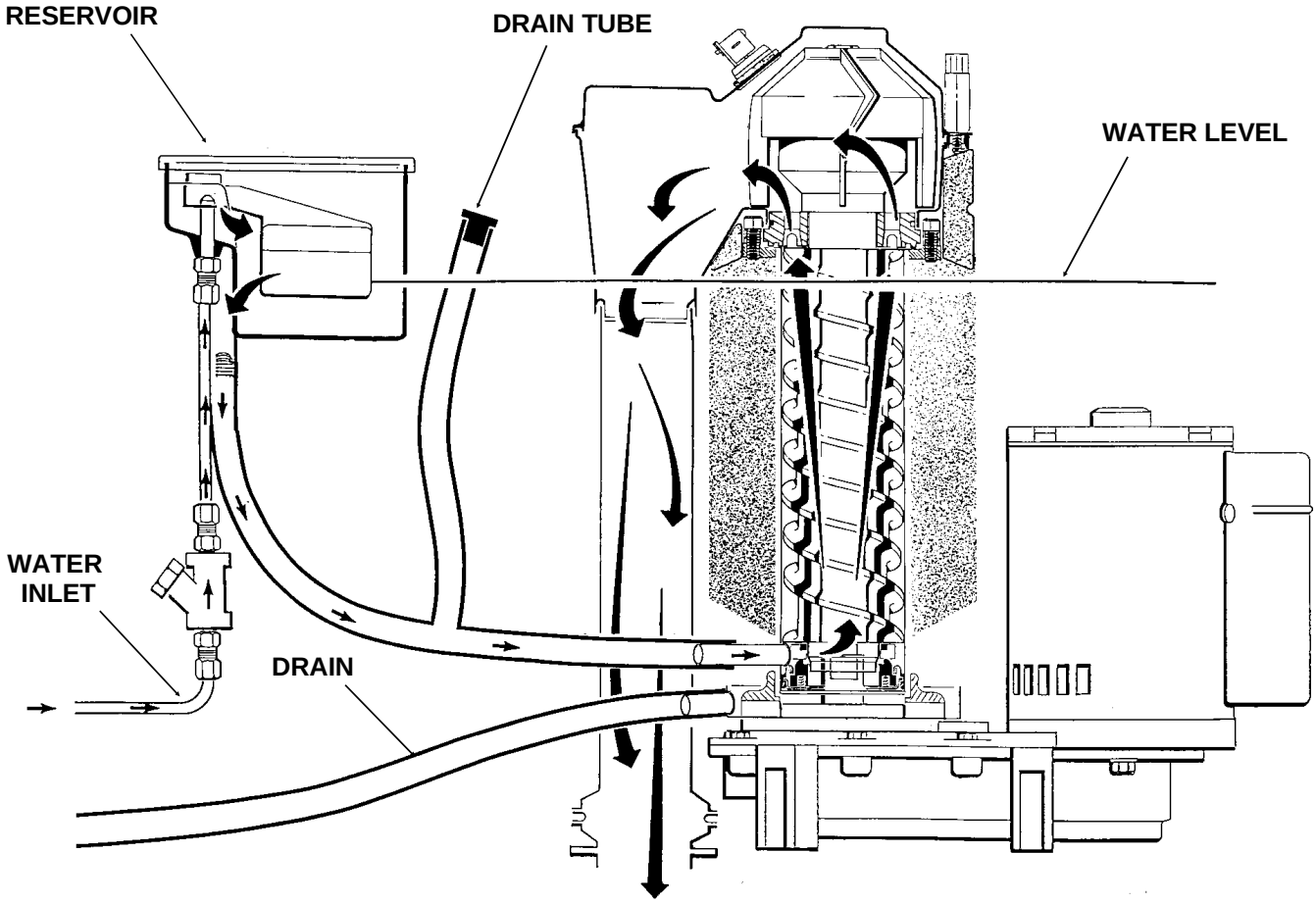

OPERATION: Refrigeration

Beginning at the compressor, the refrigerant 502 is compressed into a high temperature gas. The discharge line directs this gas to the condenser. At the remote condenser the gas is cooled by air and it then condenses into a liquid. This high pressure liquid then goes through the liquid line to the head pressure control valve, into the receiver, through the liquid line valve and then through the expansion valve. The thermostatic expansion valve meters liquid refrigerant into the evaporator, the volume of liquid refrigerant depending upon the temperature of the evaporator; warmer evaporators get more refrigerant and colder evaporators get less. At the evaporator, the refrigerant enters an area of relatively low pressure, where it can easily "boil off" or evaporate. As it evaporates, it absorbs heat from the evaporator and whatever is in contact with it (such as the water inside it). After the evaporator, the refrigerant, now a low pressure vapor, goes through the suction line back to compressor, where the cycle is repeated.

Refrigeration Schematic

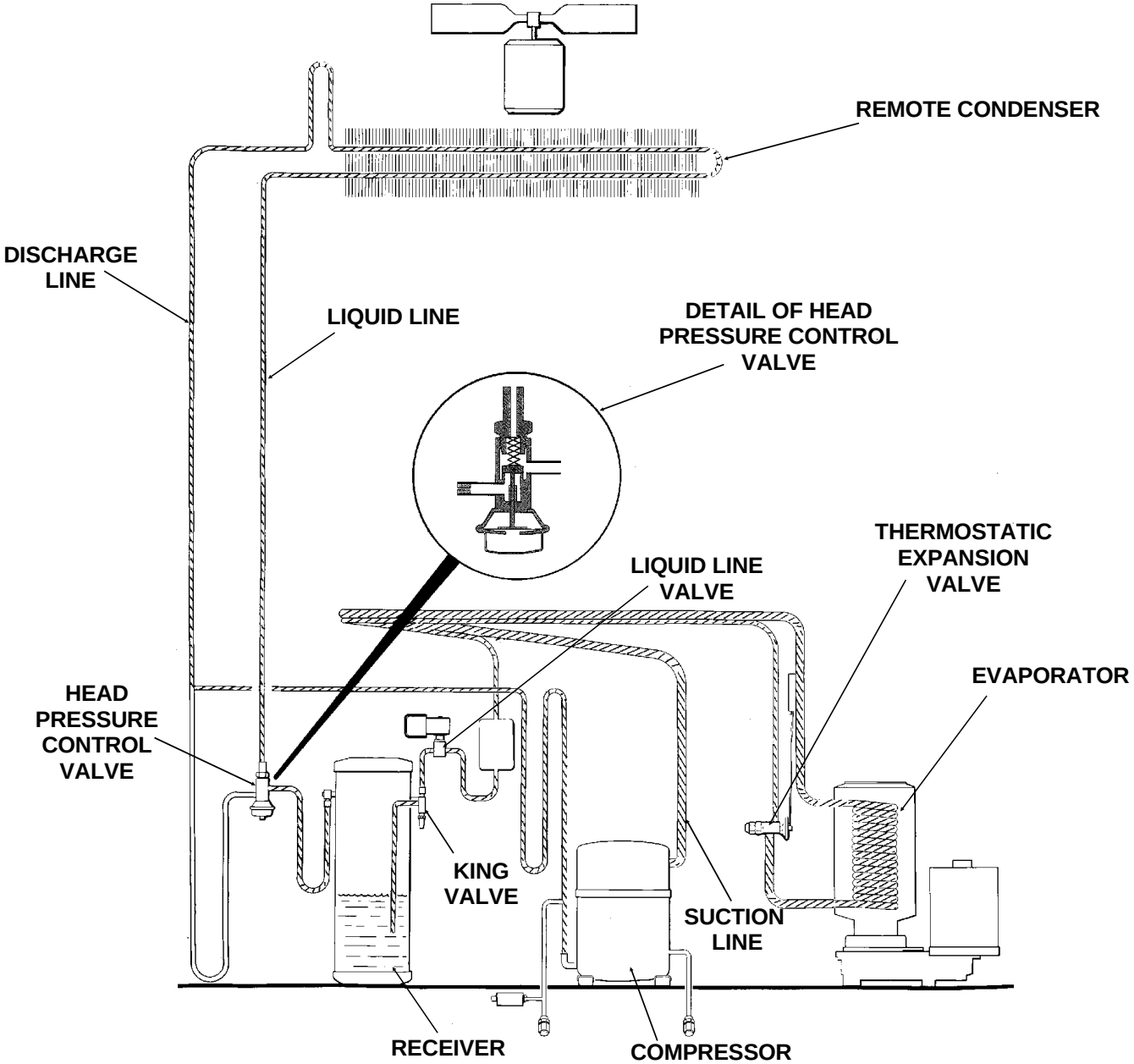

Low Condensing Temperature

The refrigeration system under low condenser air temperatures is much the same as it is under higher temperatures, with the exception that the resulting low head pressures cause the head pressure control to close off the liquid line between ththe condenser and the receiver. This forces more refrigerant into the condenser (with a small amount of discharge gas going into the receiver to maintain pressure until the head pressure is built back up to the rated gauge pressure of 220 psig). At that pressure the valve opens up the liquid line from the condenser to the receiver.

Refrigeration Schematic

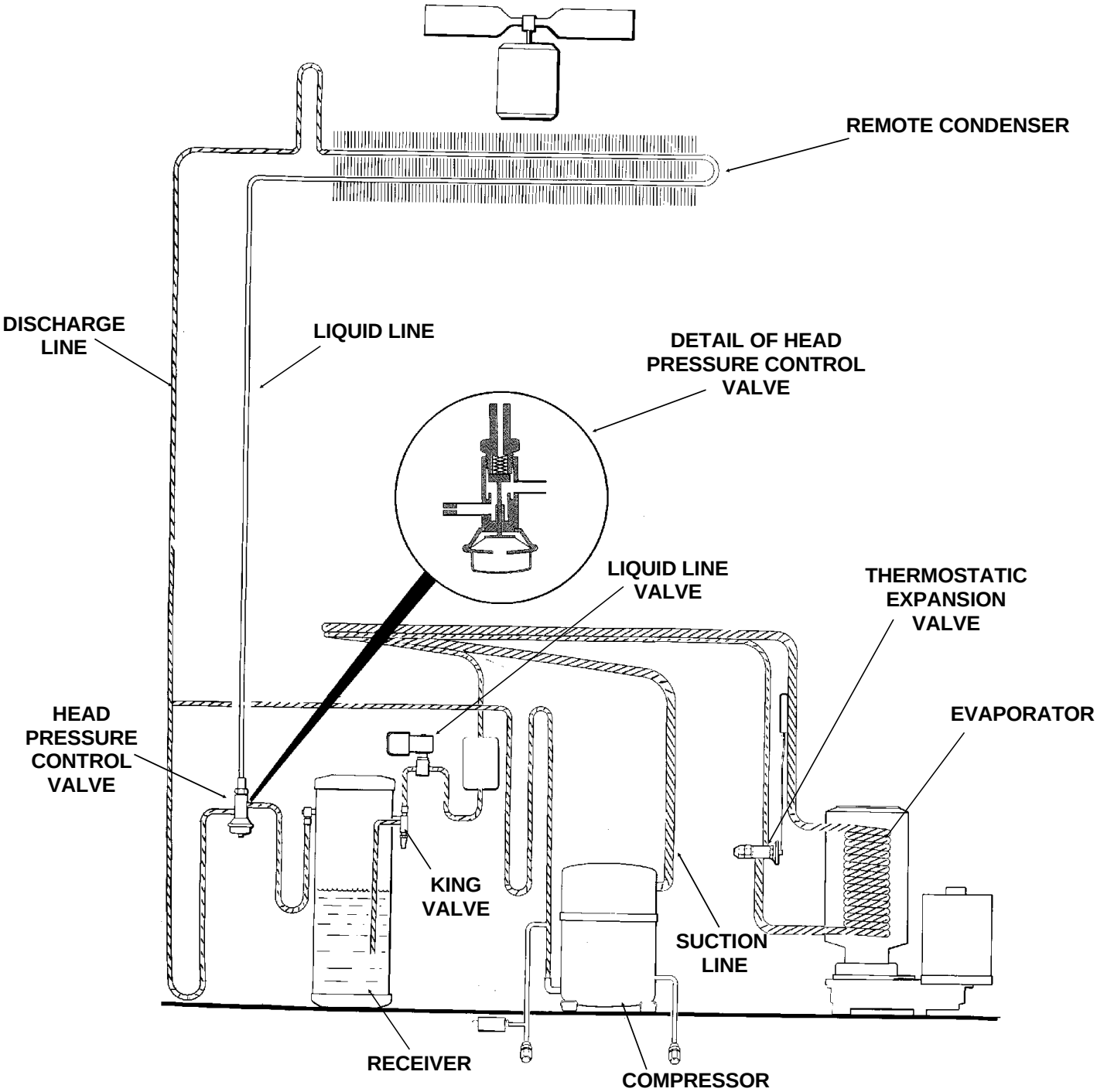

PUMP DOWN

During the pump down cycle (usually initiated by the circuit board de-energizing the liquid line valve) the discharge gases flow through their normal path to the remote condenser, through the head pressure control, and into the receiver. At this point the refrigerant flow is stopped by the closed liquid line valve. This action forces the refrigerant into the receiver and keeps it out of the compressor. The pump down continues until the low pressure control turns the compressor off.

Refrigeration Schematic

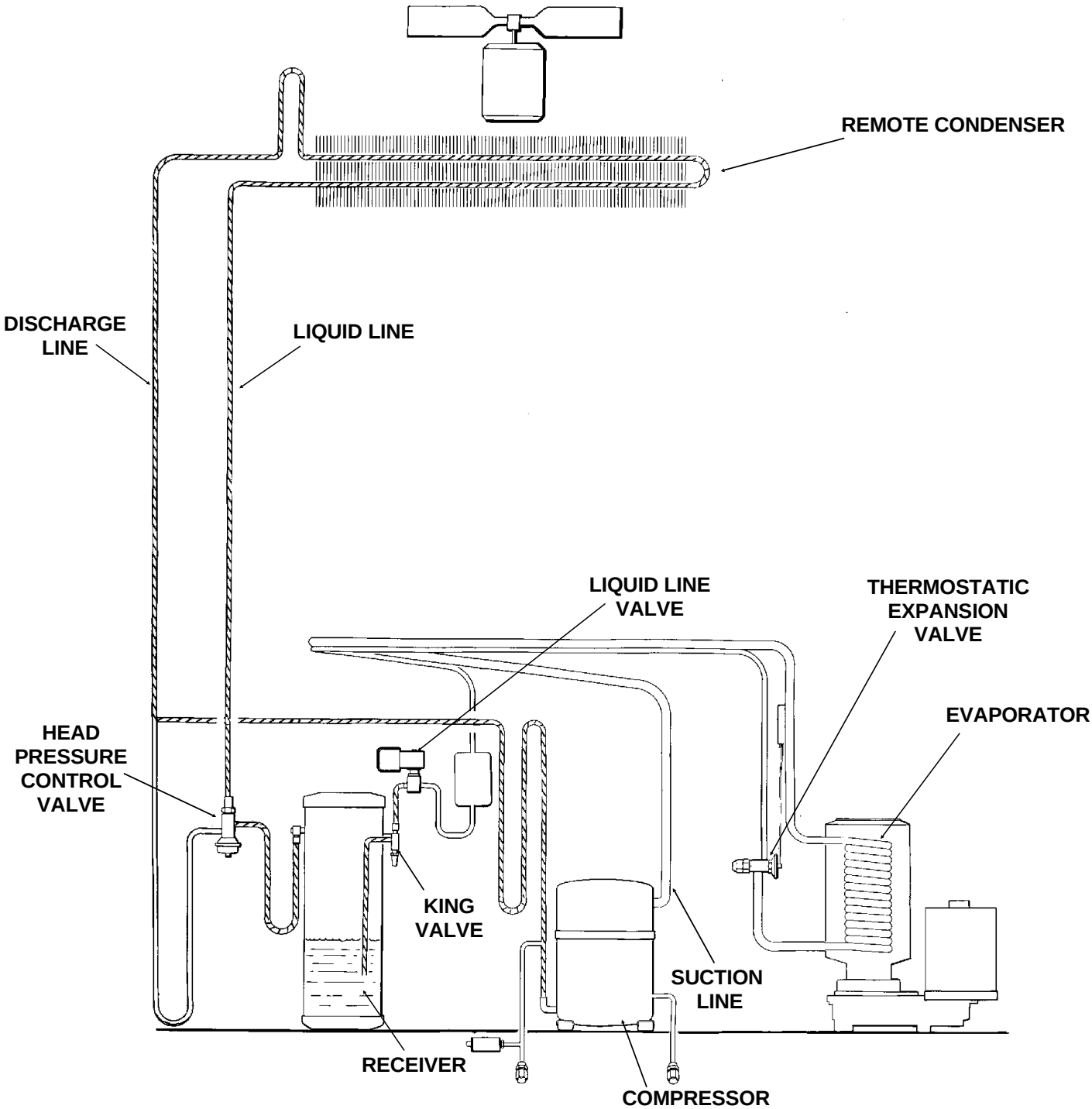

MAINTENANCE AND CLEANING

//
A Scotsman Ice System represents a sizable investment of time and money in any company's business. In order to receive the best return for that investment, it MUST receive periodic maintenance.

It is the USER'S RESPONSIBILITY to see that the unit is properly maintained. It is always preferable, and less costly in the long run, to avoid possible down time by keeping it clean; adjusting it as needed; and by replacing worn parts before they can cause failure. The following is a list of recommended maintenance that will help keep the machine running with a minimum of problems.

Maintenance and Cleaning should be scheduled at a minimum of twice per year.
//

////////////////////////////WARNING////////////////////////////

Electrical power will be ON when doing in place cleaning. Switch it OFF before completing the cleaning process.

//

ICEMAKING SYSTEM: In place cleaning

1. Check and clean any water treatment devices, if any are installed.
2. Remove screws and the front and top panels.
3. Move the ON-OFF switch to OFF.
4. Remove all the ice from the storage bin.
5. Remove the cover to the water reservoir and block the float up.
6. Drain the water reservoir and freezer assembly using the drain tube attached to the freezer water inlet. Return the drain tube to its normal upright position and replace the end cap.

//////////////////////////WARNING//////////////////////////////

Scotsman Ice Machine Cleaner contains Phosphoric and Hydroxyacetic acids. These compounds are corrosive and may cause burns. If swallowed, DO NOT induce vomiting. Give large amounts of water or milk. Call Physician immediately. In case of external contact, flush with water. KEEP OUT OF THE REACH OF CHILDREN.

//

7. Prepare the cleaning solution: Mix eight ounces of Scotsman Ice Machine Cleaner with three quarts of hot water. The solution should be between 90 and 115 degrees F.
8. Slowly pour the cleaning solution into the water reservoir until it is full. Wait 15 minutes, then switch the master switch to ON.
9. As the ice maker begins to use water from the reservoir, continue to add more cleaning solution to maintain a full reservoir.
10. After all of the cleaning solution has been added to the reservoir, and the reservoir is nearly empty, switch the master switch to OFF.
11. After draining the reservoir, as in step 6, wash and rinse the water reservoir.
12. Remove the block from the float in the water reservoir.
13. Switch the master switch to ON
14. Continue ice making for at least 15 minutes, to flush out any cleaning solution. Check ice for acid taste - continue icemaking until ice tastes sweet.

//////////////////////////////WARNING/////////////////////////

DO NOT USE any ice produced from the cleaning solution.

Be sure no ice remains in the bin.

//

15. Remove all ice from the storage bin.
16. Add warm water to the ice storage bin and thoroughly wash and rinse all surfaces within the bin.
17. Sanitize the bin interior with an approved sanitizer using the directions for that sanitizer.
18. Replace the panels.

////////////////////////////WARNING////////////////////////////
Disconnect electrical power before beginning.
//

1. The bin control uses devices that sense light, therefore they must be kept clean enough so that they can “see”. At least twice a year, remove the bin control sensors from the base of the ice chute, and wipe the inside clean, as illustrated.

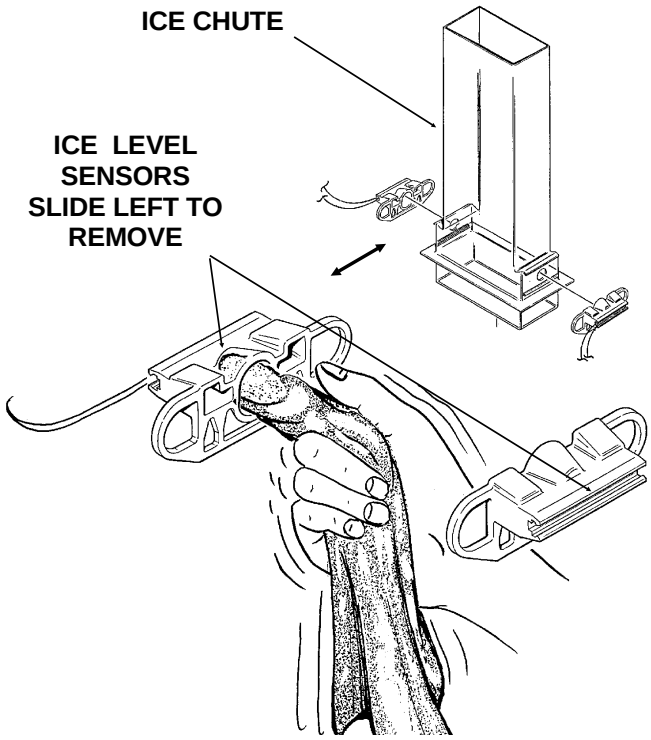

2. The ice machine senses water level by a

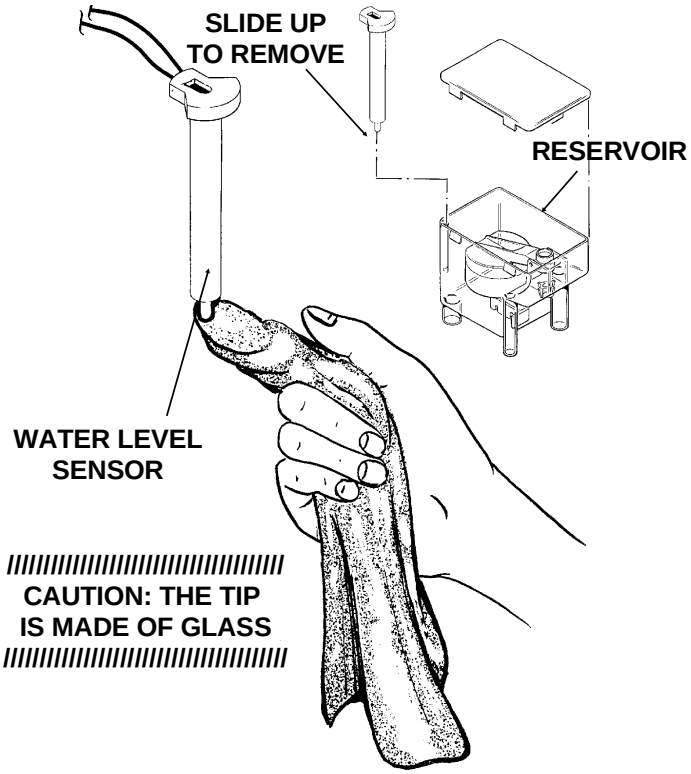

probe located in the water reservoir. At least twice a year, the probe should be removed from the reservoir, and the tip wiped clean of mineral buildup.

3. The top bearing in the breaker should also be checked at least **two times per year**.

Check the breaker bearing by:

- removing the ice chute cover
- unscrewing the ice sweep
- removing the water shed
- using a spanner wrench and unscrewing the breaker cover (left hand thread)
- unscrewing the auger stud

Inspect the assembly, looking for wear

4. Clean the remote condenser. Use a vacuum cleaner or coil cleaner if needed. Do NOT use a wire brush.

5. Check and tighten all bolts and screws.

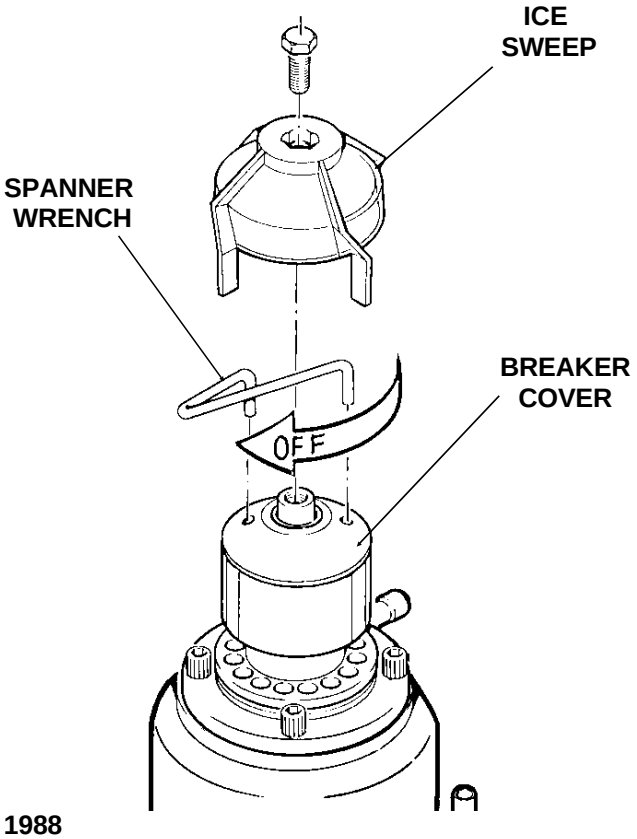

MAINTENANCE AND CLEANING

In some areas the water supply to the icemaker will have a great deal of minerals in it, and that will result in ann evaporator and auger becoming coated with these minerals, requiring a more frequent removal than twice per year. If in doubt about the condition of the evaporator and auger, the auger can be removed so the parts can be inspected.

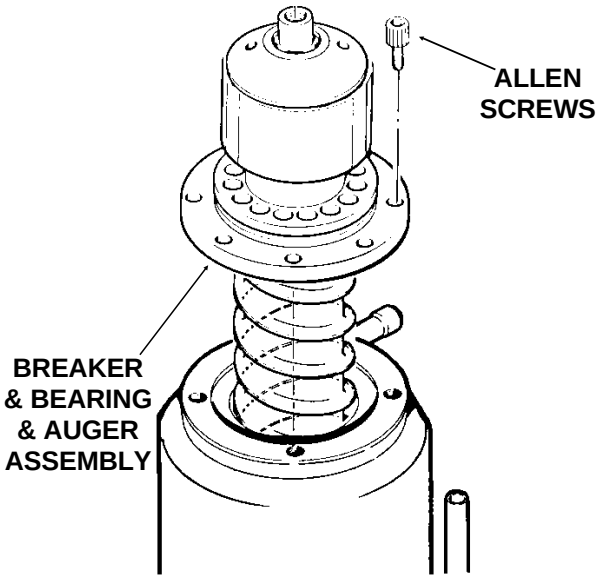

Note: Water filters can filter out suspended solids, but not dissolved solids. “Soft” water may not be the complete answer. Check with a water treatment specialist regarding water treatment

For more information on removal and replacement of these parts, see REMOVAL AND REPLACEMENT.

1. To remove the auger, remove the front and top panels.
2. Remove 3 hex studs holding ice chute cover to ice chute, and remove cover.
3. Unscrew and remove ice sweep.
4. Loosen band clamp under ice chute, and remove ice chute from evaporator.
5. Remove 4 allen screws holding breaker to evaporator.
6. Pull up to remove auger.

After the auger has been removed, allow the auger to dry; if the auger is not bright and shiny, it must be cleaned.

Clean the auger and evaporator as required.

DO NOT HONE THE EVAPORATOR.

7. Replace the water seal.
8. Reverse to reassemble.

SERVICE DIAGNOSIS: Condition - No Ice Being Produced

STATUS: *NOTHING OPERATES*

A. Check: **Voltage** to the unit, restore it if there is none. Compare to the nameplate.

B. Check: The **master switch**, switch ON if off.

C. Check: The 2 reset switches (circuit board and high pressure): depress and release each switch. If the unit still does not start, check the spout switch, or high side pressure.

D. Check the **high pressure cut out switch.**

1. This pressure switch opens at 450 psig. Check the high side pressure, reset the switch and observe that the fan is forcing air through the condenser. If the switch opens at pressures below 450 psig, replace the switch. If the pressures rise above the trip out point, and the unit shuts down:

a. Check for adequate air flow. Clean the condenser. If the air flow is poor because of the installation, advise the user that the unit should be moved, or the air around it kept cooler.

Check the fan motor for tight bearings and proper rotation.

Check that the fan blades are clean, and the fan secure to the fan motor shaft.

b. Check the head pressure control valve, it should be maintaining a head pressure above 220 psig. If the unit has the correct charge, and the condenser is clean, and the refrigerant lines are not kinked or twisted, and the condenser is not overheated by external heat loads, the head pressure should be under the trip out point of the head pressure control switch. If all of the above are found to be good, and the machine trips out on high head pressure, replace the head pressure control valve.

E. Check the **spout switch**.

1. This switch will open if the bin control (ice level sensor) does not shut the machine off when the ice storage bin is full of ice: ice backs up in the ice chute, and internal pressure opens the switch, stopping the machine. After the ice melts, the switch will reset but the machine will not restart until the reset switch in the control box is pressed. If the machine does start, check:

a. The ice level sensors, they may need cleaning (see maintenance).

b. The circuit board, see next page.

F. Check the **water level.** If there is not enough water in the reservoir, the water level sensor will keep the machine from starting.

a. Check the water level, restore/adjust if low.

b. Check the water level sensor, clean if dirty, (see maintenance).

c. Check the circuit board, see next page.

If the machine does not start, see the next page.

SERVICE DIAGNOSIS: Condition - No Ice Being Produced

STATUS: *NOTHING OPERATES*

G. Check: The gear **motor**, if it will not run, the compressor will not run. If no power to it: Check: the **indicator lights** on the circuit board, the **bin empty** light should be ON, the **no water** light should be OFF **.**

1. If the **bin empty** and **no water** lights are off, check the **transformer**.
   - a**.** Transformer "load" side should have 12 to 15 volts. If not, check the "line" side. The line side should have between 208-230 volts. If the line side has the correct voltage and the load side does not, replace the transformer.
2. If the transformer is good, and the **bin empty** light is OFF, check the **ice level sensors**.
   - a**.** Remove sensors by sliding them sideways out of the ice chute. Visually inspect them, clean if needed.
   - b**.** Look through the ice chute "eye" hole for something blocking the ice chute.
   - c. If the unit still does not run, replace the ice level sensors.
   - d**.** If the bin empty light is still OFF, check the **circuit board**.
     1. Unplug "opto trans" and "LED" connectors from the circuit board.
     2. Plug "opto trans" and "LED" connectors from the Scotsman Electronic Control Testor Model NM1 into the circiut board **(see page 35).**
        - a. Move the "bin full" switch on the tester to the full position. The bin full light on the tester should be ON, if not, replace the circuit board.
        - If the bin full light on the tester is ON, move the tester switch to "bin empty" the light on the tester should go OFF and the bin empty light on the circuit board should go ON. If not, replace the circuit board. If it does as above, and the machine still does not run, replace the ice level sensors.
3**.** If the transformer is fine, and the "no water" light is ON, check the **water level sensor.**
   - a. Check the water level in the **reservoir,** restore if low. If the water level is ok:
   - b. Remove the water level sensor from the reservoir and clean the tip if dirty.

   //

   CAUTION: THE TIP IS MADE OF GLASS

   //

   - c**.** Replace the water level sensor. If the no water light is still on, check that the "water sen" plug is firmly plugged into the circuit board.
   - d. If the no water light is still on,
     1. Unplug the "water sen" connector from the circuit board.
     2. Plug "water sen" connector from the control tester into the circuit board.
        - a. Move the water switch on the tester to "no water" and the no water light on the circuit board should go on. If not, replace the board..
        - b. Move the water switch to the" water" position, the no water light should go off, if not, replace the circuit board.
        - c. If after the above, the machine still will not run, replace the water level sensor

MORE INFORMATION ON THE TESTOR MAY BE FOUND ON PAGE 38.

SERVICE DIAGNOSIS: Condition - No Ice Being Produced

STATUS: *GEARMOTOR OPERATES, COMPRESSOR DOES NOT*

A. Check the pump down control switch.

1. This pressure switch opens at 6-10 psig, and closes at 16-20 psig. If open check the low side pressure, if after running the machine the switch opens at a pressure higher than 10 psig, replace the switch.

The low pressure control switch could remain open for any of the following reasons: Low refrigerant charge, auger not turning, restricted system, TXV not opening, liquid line valve not opening.

2. Check the low side pressure, the low pressure cut out switch should remain closed at any pressure higher than 10 psig. If less than that:

a. Check if the **auger** is turning, if it is not, remove the **gearbox** and:

Check for internal damage, repair and replace in the machine.

b. Check for low charge, add some refrigerant, if the unit begins to operate, (normal low side pressure being about 30 psig) stop and look for a leak, repair, replace the drier, evacuate, and weigh in the nameplate charge. If, with added charge, the unit does **not** operate:

Check for a restricted system, replace the drier, evacuate, and weigh in a nameplate charge.

Check for a **Thermostatic Expansion Valve** that does not open, if defective, replace it. Replace the drier, evacuate, and weigh in the nameplate charge.

c. Check the liquid line solinoid valve, it should have power to it, if not:

Check the connections on the circuit board. The liquid line (or compressor) relay on the circuit board may have failed. If so, replacethe circuit board.

If there is power to the valve, the coil may be open, or the valve jammed, replace the valve.

SERVICE DIAGNOSIS: Condition - Low Ice Production

STATUS: *EVERYTHING IS OPERATING*

A. Check the condenser for dirt. Clean as required. Check the head pressure. If the head pressure is very high:

1. Check for high air temperatures, or restrictive air flow. Correct as needed.
2. The refrigerant may contain non condensable gases, purge, evacuate, and recharge per nameplate.
3. Check the interconnecting refrigerant tubing for kinks or twists.

   Check that the discharge and liquid lines are insulated, and do not touch each other where not insulated.

B. Check the evaporator

1. Clean the evaporator, the mineral build up will adversely affect the ice machines production.
2. Check the evaporator for water leaks, replace the water seal if found to be leaking.
3. Check the low side pressure; normal is about 30 psig. If low, assume a refrigerant leak, locate, repair and recharge.

   If no leak, the TXV may be restricted, defective or not adjusted properly. If needed, replace the TXV, evacuate, and recharge per nameplate.
4. Check the insulation on the evaporator. It should be dry, with no wet spots or frost. If the insulation has failed: replace the evaporator or add extra insulation in the form of foam tape to the evaporator.

C. Check the compressor

1. The compressor may be inefficient.

   a. Check the amp draw, if low change the compressor.

   b. if the amp draw is normal, pinch off the suction line to check the pull down capability of the compressor. The compressor should pull down to 25 inches of vacuum and hold there for three to five minutes.

D. Refrigerant charge

On this model the refrigerant charge is adequate whenever the receiver has enough liquid refrigerant to maintain liquid refrigerant at the TXV. HOWEVER, the condensing temperature will have a definate bearing on this. A unit with a marginal charge in summer, will be **undercharged** when the outside air temperature drops. The only correct way to charge this unit is to weigh in the nameplate charge.

REMOVAL AND REPLACEMENT: Water Reservoir & Bin Controls

WATER RESERVOIR

1. Shut off the water supply to the icemaker.
2. Remove front panel and reservoir cover.
3. To remove float only, pry the mounting flanges apart enough to lift one float pivot pin out of the flange hole, and pull float up and out of the reservoir.
4. To remove reservoir, disconnect water inlet compression fitting at reservoir inlet.
5. Remove drain hose from reservoir.
6. Remove evaporator inlet hose from reservoir.
7. Remove mounting screws from reservoir bracket, and remove reservoir from icemaker.
8. Reverse to reassemble.

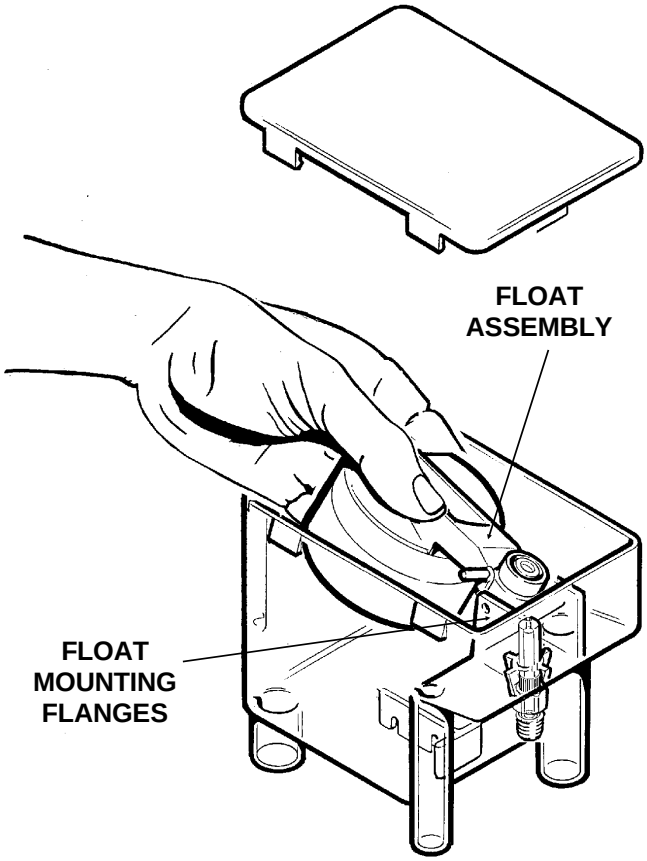

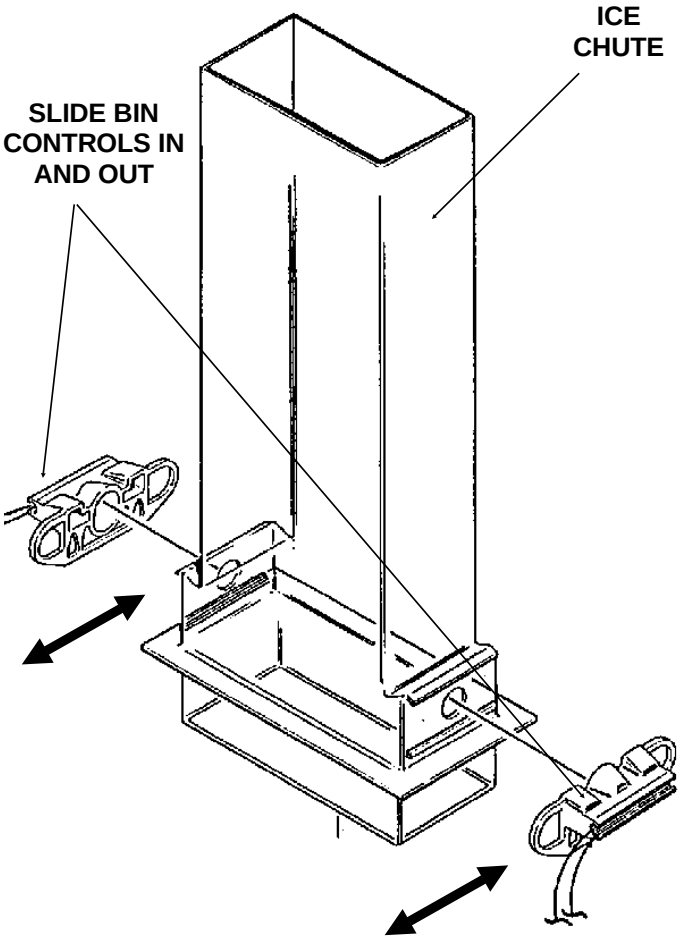

BIN CONTROLS (Ice Level Sensors)

1. Disconnect electrical power.
2. Remove front panel.
3. Remove control box cover.
4. Locate ice chute, at the base of the chute, in front of and behind it are two plastic bin control mounts.
5. Slide each bin control to the left, and in the control box, disconnect the electrical leads connecting the bin control to the circuit board.
6. Reverse to reassemble, be certain that the bin controls are aligned so that the ice level sensors are visible (centered) through the holes in the ice chute.

REMOVAL AND REPLACEMENT: Bearing And Breaker

Note: Removal of the auger, water seal, evaporator and gearmotor must begin at the top of the assembly.

To Remove the Breaker Bearing Assembly:

////////////////////////////WARNING////////////////////////////

Disconnect the electrical power to the machine at the building source BEFORE proceeding with any repair.

//

1. Remove panels and disconnect electrical power.

2. Unscrew three studs and remove ice chute cover.

3. Unscrew and remove ice sweep.

4. Remove insulation halves from outside of ice chute, loosen band clamp under ice chute, lift up and remove ice chute.

5. The breaker may be removed from the auger and evaporator without disturbing the auger.

a. Use spanner wrench and unscrew breaker cover from breaker (left hand threads)

b. Unscrew auger stud from top of auger.

c. Unscrew 4 allen head cap screws holding breaker to evaporator.

d. Lift up, and remove breaker/bearing assembly from auger & evaporator.

6. Service the bearing. Check for rust, rough spots and damage.

a. The bearing is pressed into the breaker, to remove the bearing and replace it an arbor press is needed.

b. Replace lower seals before installing new bearing in breaker.

Note: seals must be pressed in with a tool pushing against the outer edge only, they will not install by hand.

Replace parts as required. Re-grease bearing with Scotsman part no. 19-0609-01 bearing grease. Replace top seal, and check the o-rings, replace if cut or torn.

7. Reverse to reassemble: specific tools and materials are required to install properly.

a. Add food grade grease such as Scotsman part number 19-0569-01 to the seal area before installing on the auger.

b. Check the seal to shaft areas for cuts, or rough spots: none are permitted.

Step 5-a

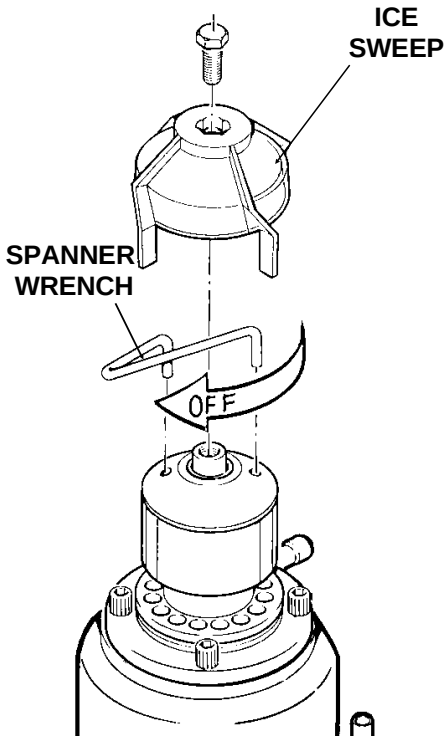

Step 5-b

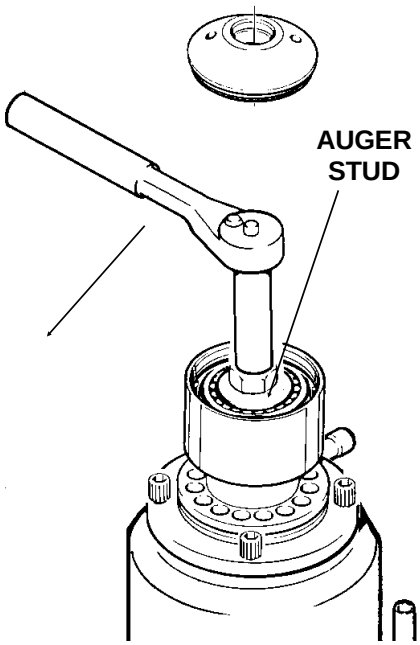

Step 5-c and Step 6

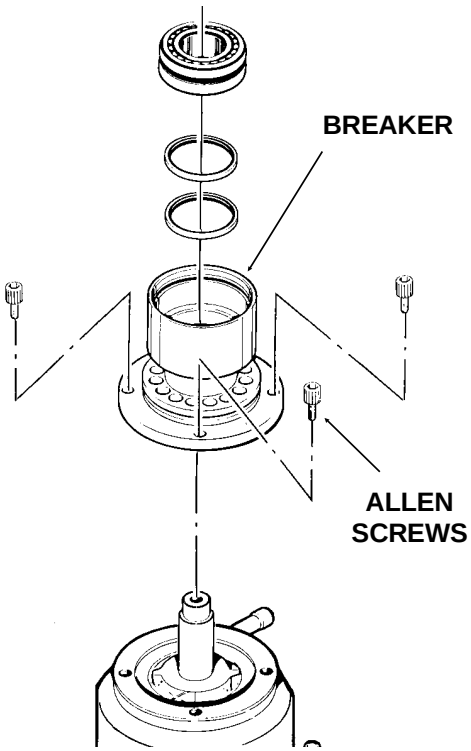

REMOVAL AND REPLACEMENT: Water Seal

To Remove the Water Seal:

(Assuming all steps to remove the auger have been performed.)

1. The gearmotor/evaporator assembly will have to be pulled away from the machine (if not yet done).

2. Remove the 4 hex head cap screws holding the evaporator to the gearmotor assembly. Lift the evaporator up and off of the gearmotor.

3. Remove the snap ring or wire retainer from the grove under the water seal.

4. Pull or drive out the lower half of the water seal.

To Replace the Water Seal:

1. Lubricate the water seal with water, and push the water seal into the bottom of the evaporator slightly past the grove for the snap ring.

2. Replace the snap ring and pull the water seal down against it.

3. The part of the water seal that rotates with the auger must also be replaced. Remove the old part from the auger and clean the mounting area.

4. Place a small bead of food grade silastic sealant (such as 732 RTV or Scotsman part number 19-0529-01) on the area of the auger where the water seal is to be mounted.

5. Carefully push the water seal (rubber side against the auger shoulder and the silastic.)

////////////////////////////CAUTION////////////////////////////

Do not get any silastic onto the face of the seal.

//

6. Allow the auger and seal to air dry until the silastic is dry on the surface.

7. If the original water seal was leaking, it would be a good idea to inspect the interior of the gearmotor.

To Replace the Evaporator:

(Assuming all the steps for removal of the thrust bearing, breaker, auger, and water seal have been performed.)

REMOVAL OF THE WATER SEAL

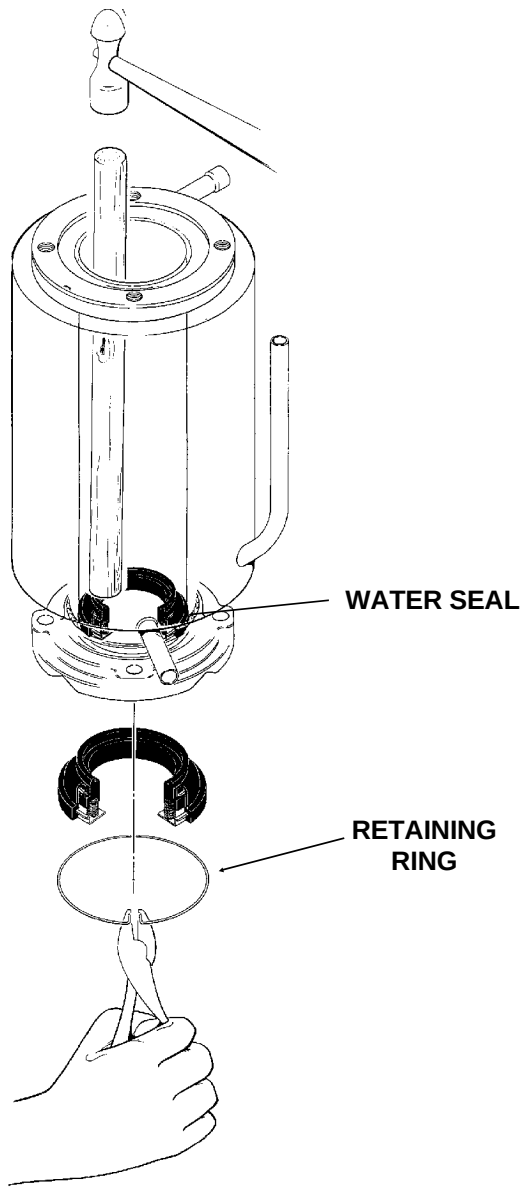

REMOVAL AND REPLACEMENT: Evaporator

1. Discharge the refrigerant from the ice maker.
2. Unsweat the refrigerant connections:
 a) At the thermostatic expansion valve outlet.

////////////////////////////CAUTION////////////////////////////

Heat sink the TXV body when unsweating or resweating the adjacent tubing.

//

 b) At the suction line at the joint about 3" from the evaporator.
3. Remove the evaporator.
4. Unsweat the drier from the liquid line.
5. After installing a new water seal in the new evaporator (see “To Replace the Water Seal”) resweat the tubing connections.
6. Install an new drier in the liquid line.
7. Evacuate the system until dehydrated, then weigh in the nameplate charge. Check for leaks.
8. Install auger, breaker, breaker bearing assembly, and ice discharge chute in reverse order of disassembly. See “To Reassemble Evaporator and Auger”

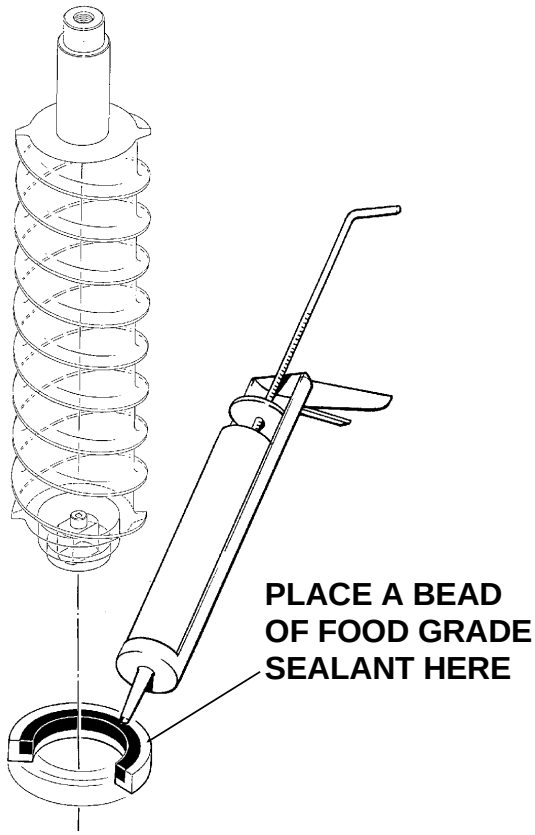

To Reassemble the Evaporator and Auger

1. After the gearmotor has been inspected, fasten the evaporator to the gear motor, be sure that the number of shims indicated on the gear case cover is in place between the gearcase cover and the drip pan gasket. Torque the bolts to 110 inch pounds.
2. Lower the auger into the evaporator barrel, slightly turning it to match up with the drive end. Do Not Drop Into the Evaporator.
3. Complete the reassembly by reversing the disassembly for the breaker & thrust bearing assembly.

To Remove and Repair the Gearmotor Assembly:

(Assuming that the procedures through removal of the water seal have been performed.)

Head Pressure Control Valve

1. Purge system of refrigerant
2. Break off process tube on the top of the OLD head pressure control valve.
3. Unsweat old valve from tubing.
4. Unsweat old dryer from tubing.
5. Install new valve in place, check for correct connections and be sure the number on the side of the valve is “220"
6. Wrap the new valve body in wet cloths to heat sink the valve body.
7. Sweat in the new valve and the new dryer.
8. Evacuate the system, and weigh the nameplate charge into the receiver.

Charging Procedures

Extra care must be taken when recharging this remote system. No liquid refrigerant may be placed in the system at the compressor. DO NOT use the schrader valves at the front of the unit for weighing in the charge. All liquid R-502 must be weighed into the receiver through the “front seated” king valve.

REMOVAL AND REPLACEMENT: Gearmotor Assembly

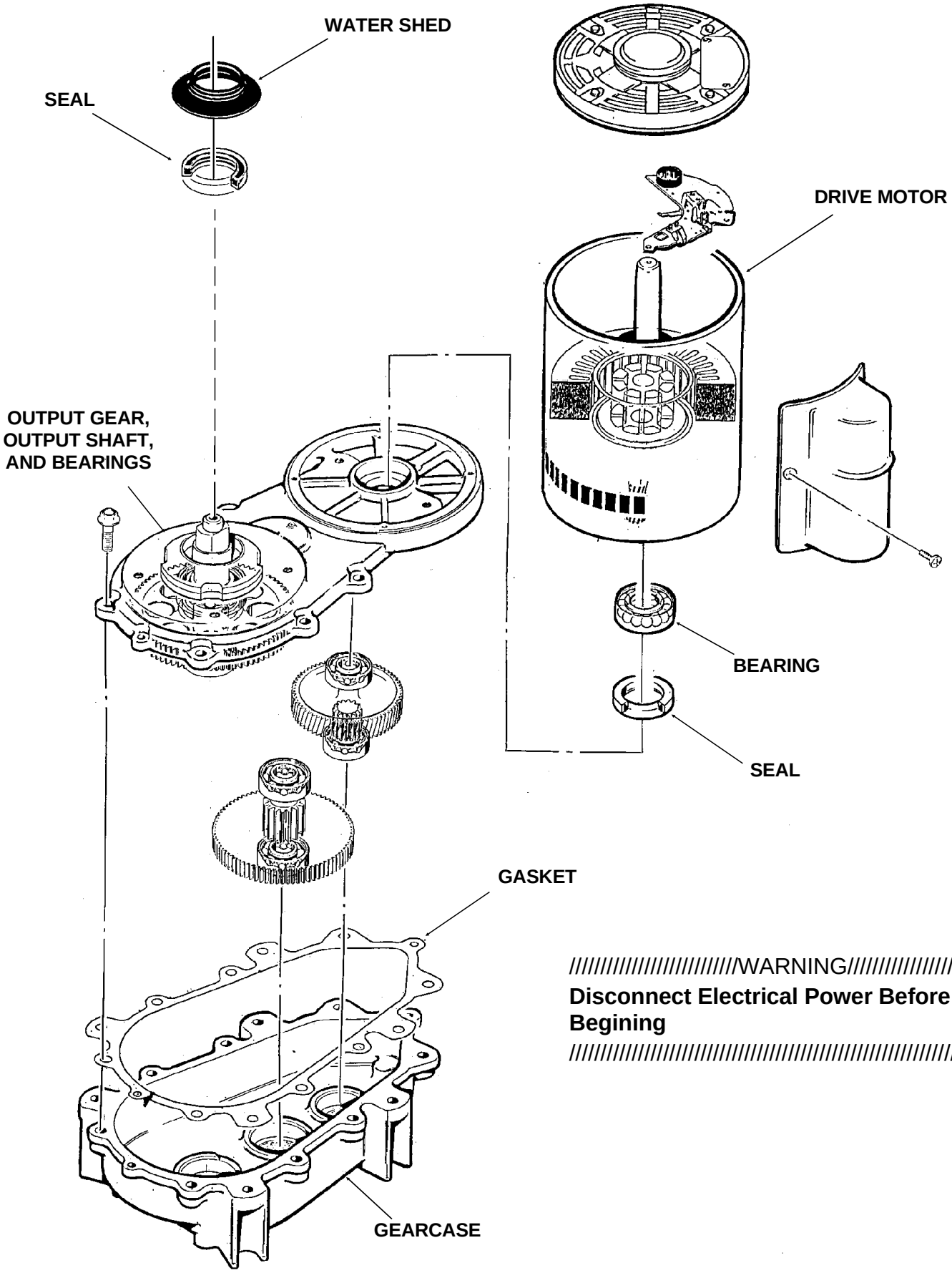

////////////////////////////WARNING////////////////////////////

Disconnect Electrical Power Before Begining

//

REMOVAL AND REPLACEMENT: Gearmotor Assembly

1. Remove the electrical wires from the gear drive motor.
2. Unscrew the 4 cap screws holding the gearmotor to the gearmotor plate.
3. Remove the gearmotor from the icemaker.

To Inspect the gearmotor.

A) Remove the cap screws holding the gearmotor case halves together and pry the two cases apart.

B) To lift off the cover, lift up until you can feel internal contact, then pull the cover towards the output gear end, and then lift the cover (with drive motor attached) up and away from the gear motor case.

Note: The case cover output gear, bearings, and shaft are one pressed together assembly. Replace as a unit.

C) Inspect the oil, gears, and bearings. If the oil level and condition is acceptable, quickly check the gears and bearings. They are likely to be fine if the oil is.

If there is evidence of water in the oil (rusty bearings and gears; the oil having a creamy white appearance; oil level too high) carefully inspect the bearings and gears. If in doubt about the condition of a part, replace it. The oil quantity is 14 fluid ounces, do not overfill.

Note: The gears and bearings are available only as pressed together sets.

D) After replacing parts as required, (if any) reassemble the gearcase. The two smaller gears and the oil should be in the lower case, the output gear will be with the cover. As you lower the cover onto the lower case, cover will have to be moved closer to the second gear after the output gear has cleared the second gear top bearing.

E) After the case is together, and the locating pins are secure in both ends, replace all cap screws.

Note: If the gearcase cover was replaced, the replacement part MAY HAVE BEEN shipped with a certain number of shims. The number of shims used **must** match the number written on the gearcase cover. ***If there was no number on the cover, and no shims with the part, do not use any shims***. Do not use the old shims.

4. Bench test the gearmotor, check for oil leaks, noise, and amp draw.

Charging Procedures

Extra care must be taken when recharging this remote system. No liquid refrigerant may be placed in the system at the compressor. DO NOT use the schrader valves at the front of the unit for weighing in the charge. All liquid R-502 must be weighed into the receiver through the “front seated” king valve".

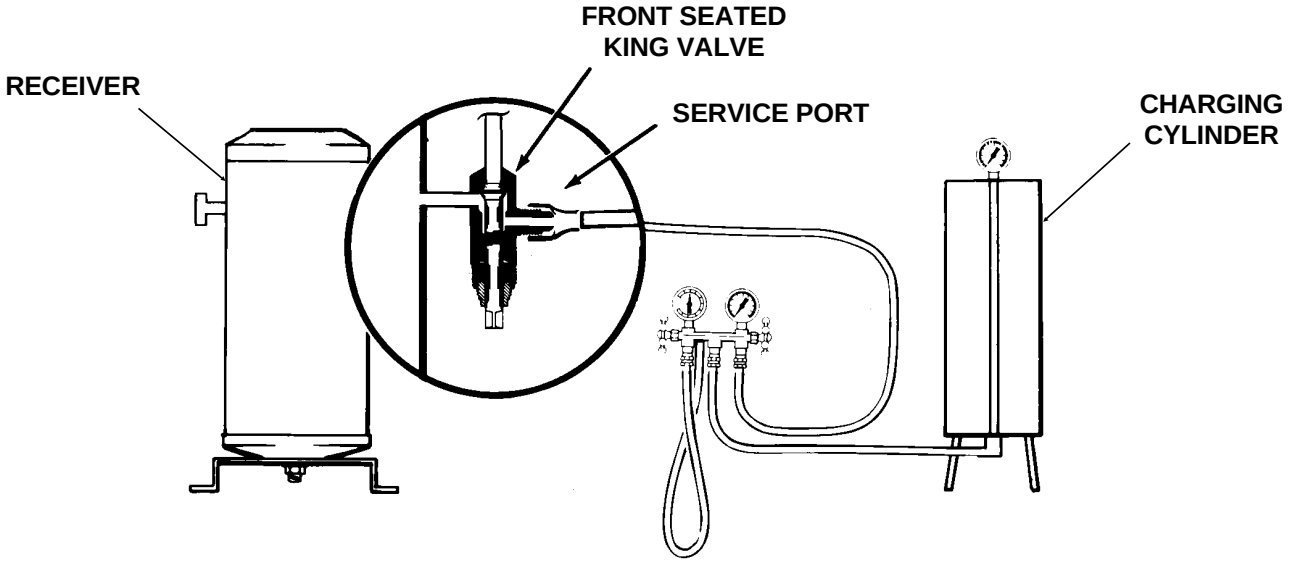

CIRCUIT BOARD TESTING

INSTRUCTIONS FOR USING TESTER MODEL FC1

(Optional, order part no. A33942-001)

(These instructions assume that the unit will not run, and prior investigation of electric power, controls, and mechanical parts indicates that the electronic circuit may be at fault.)

//WARNING//

These procedures require the machine to be connected to the power supply. The voltages of the electronic circuit are very low, but HIGHER VOLTAGES ARE PRESENT IN THE UNIT. Do not touch anything but the tester while the unit is being checked out. Make all connections to the circuit board with the ELECTRICAL POWER OFF.

//

Bin Control *Note: Testing is done with the electrical power on, the master switch on, and all the reset switches "reset".*

1. Unplug " photo trans" and "LED" connectors from the circuit board.

2. Plug "photo trans" and "LED" connectors from the tester into the circuit board.

a. Move the "bin full" switch on the tester to Full. The light on the tester should be ON.

If the light on the tester is not on, the circuit board should be replaced.

b. If the light on the tester IS on, move the "bin full" switch to Bin Empty. The light on the tester should go OFF, and the Bin Empty light on the circuit board should go ON.

If the Bin Empty light is ON, wait 10-20 seconds for the machine to start, if the machine starts, replace the ice level sensors. If the Bin Empty light does not come ON, the circuit board should be repalced.

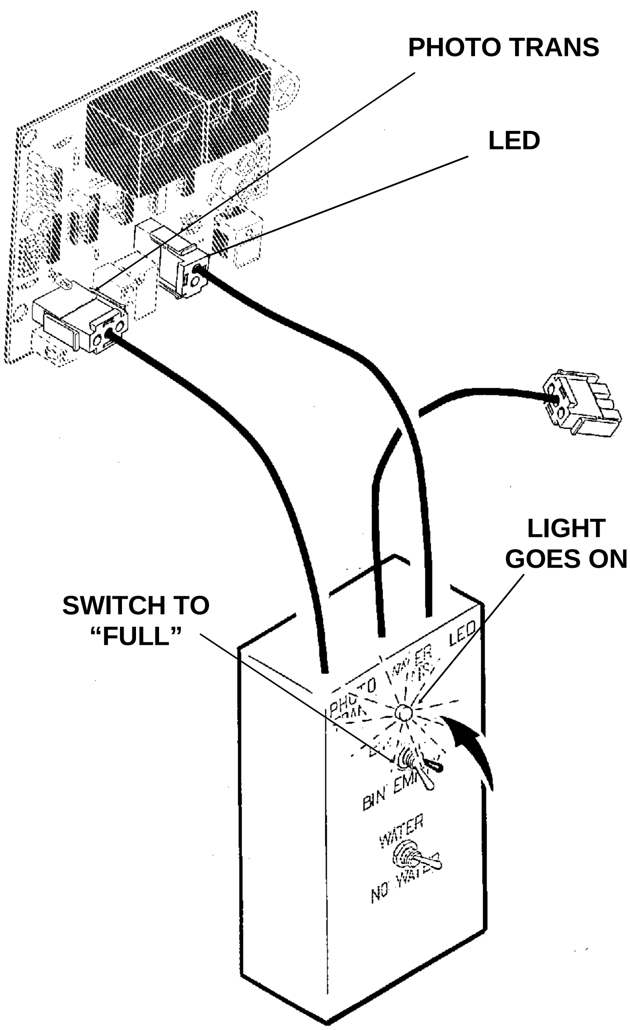

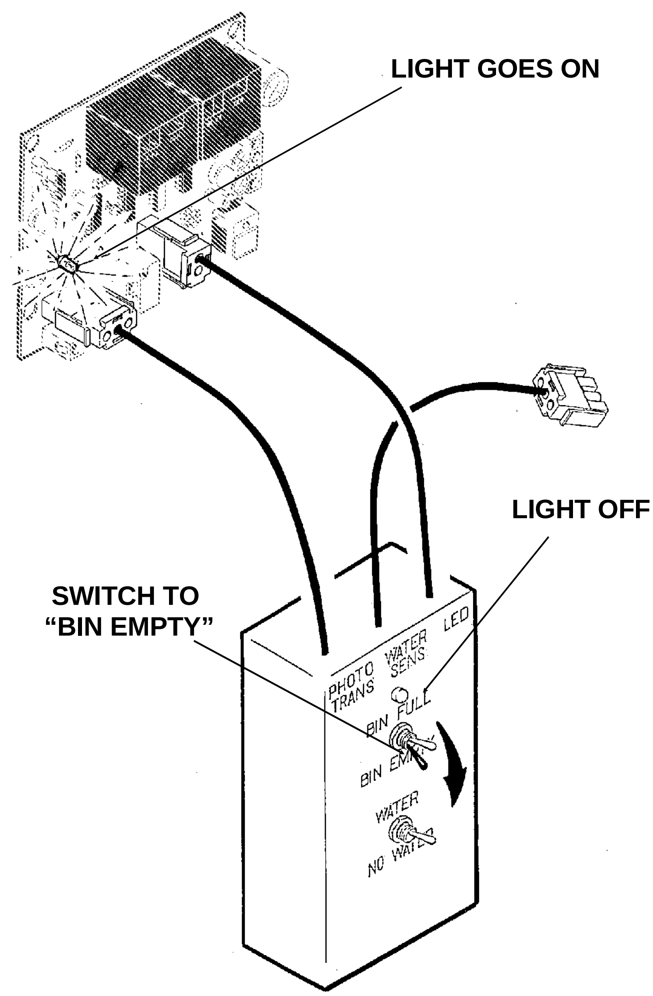

Water Level

1. Unplug “water sen” connector from control board.

2. Plug “water sen” connector from Scotsman tester into circuit board.

a. Move “water” switch on tester to No Water position. The No Water light on the circuit board should go ON. If not, replace the circuit board.
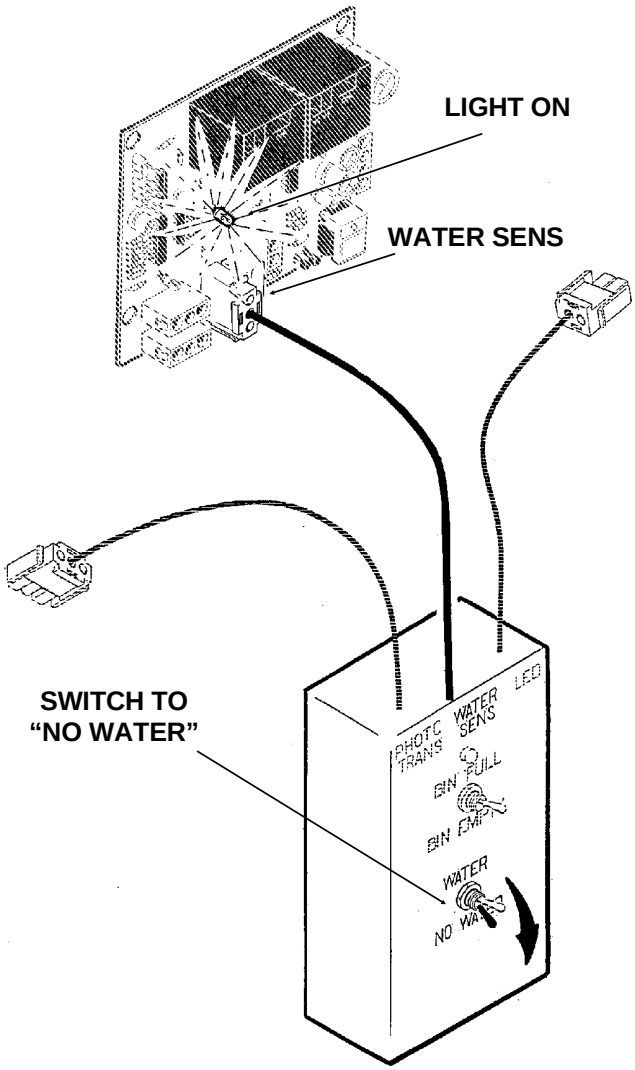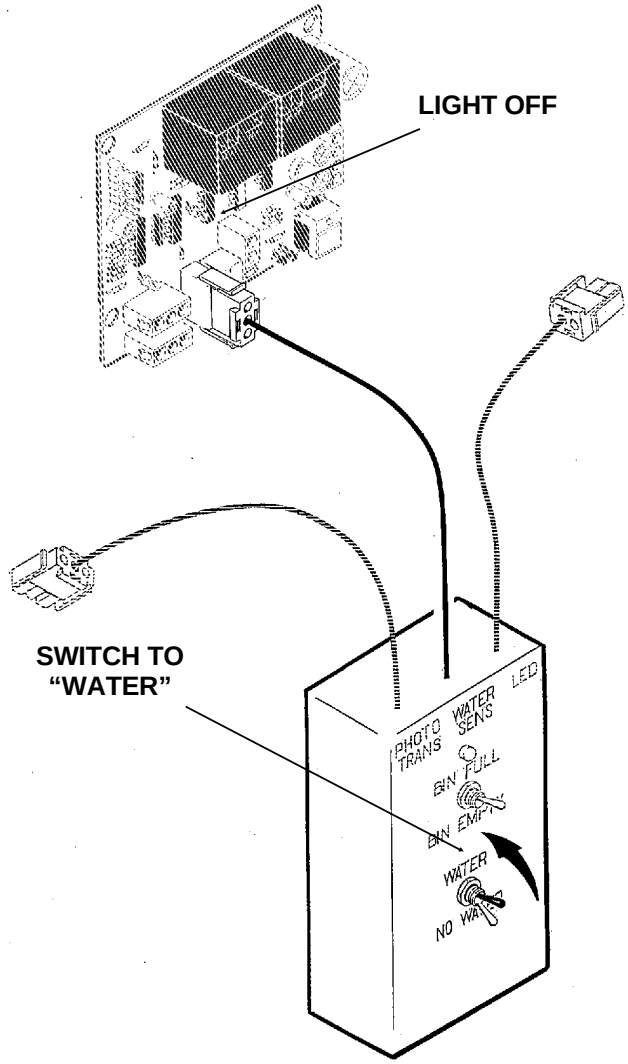
b. Move the “water” switch on the tester to the Water position. The No Water light on the board should go OFF. If not replace the circuit board. If the light does go off, replace the water level sensor.